Title	K1
Size A3	Document Number CONTENT
Rev	
Date:	Thursday, December 24, 2020
Sheet	

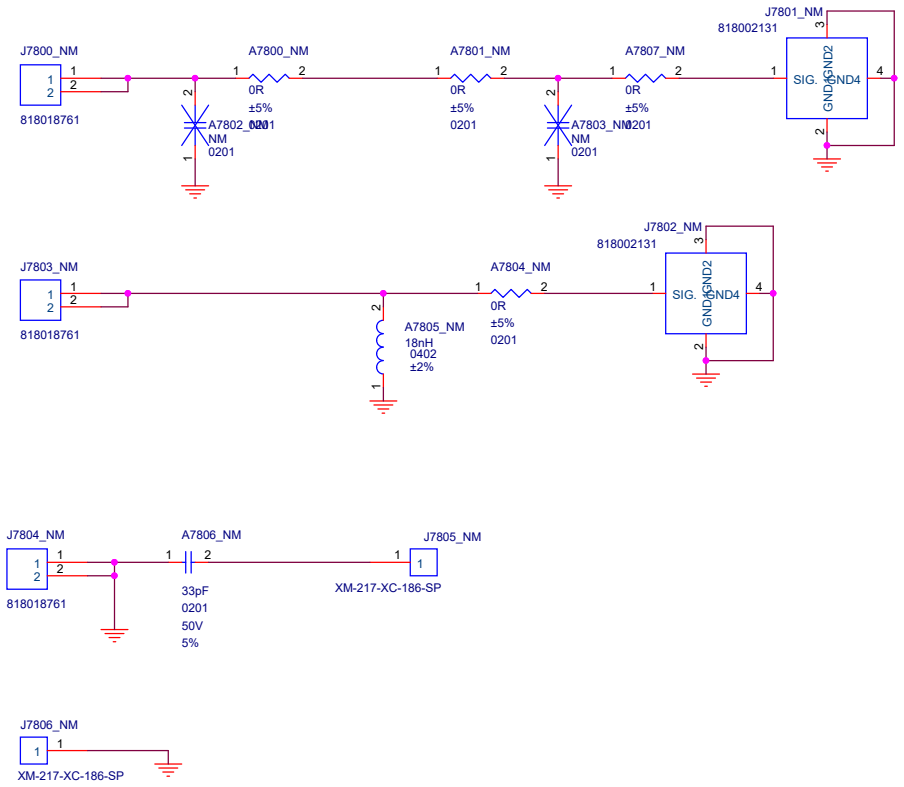
J7800_NM
818018761
A7800_NM
0R
±5%
0201
A7802_NM
NM
0201
A7801_NM
0R
±5%
0201
A7807_NM
0R
±5%
0201
A7803_NM
NM
0201
J7801_NM
818002131
SIG.
GND1
GND2
GND3
GND4
J7803_NM
818018761
A7805_NM
18nH
0402
±2%
A7804_NM
0R
±5%
0201
J7802_NM
818002131
J7804_NM
818018761
A7806_NM
33pF
0201
50V
5%
J7805_NM
XM-217-XC-186-SP
J7806_NM
XM-217-XC-186-SP

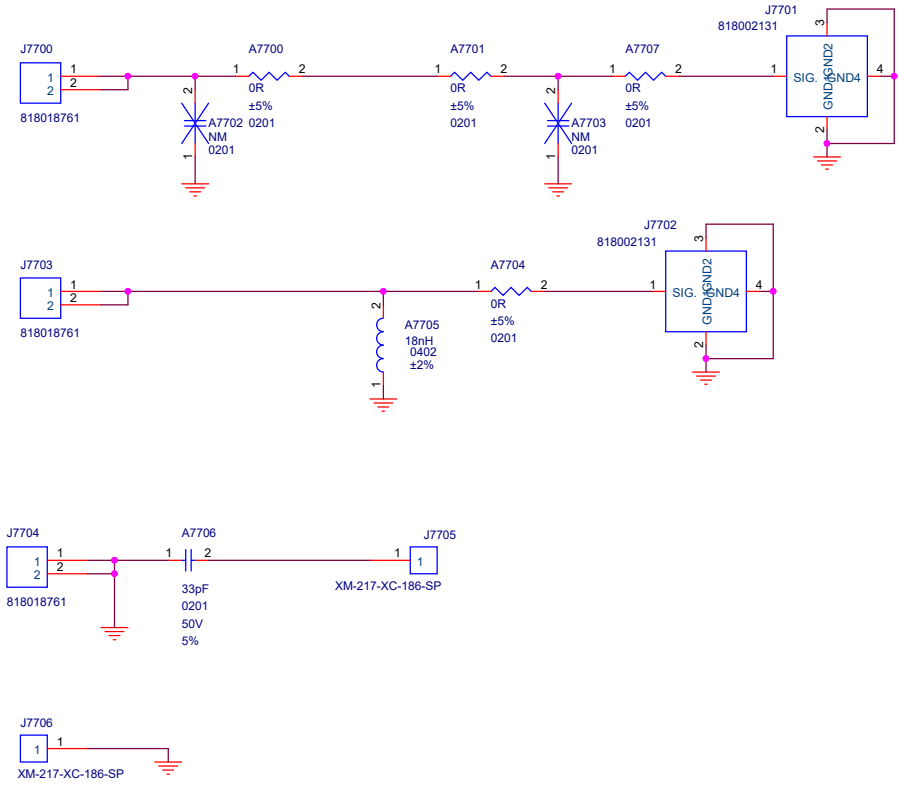
J7700
818018761
A7700
0R
±5%
0201
A7702
NM
0201
A7701
0R
±5%
0201
A7703
NM
0201
A7707
0R
±5%
0201
J7701
818002131
SIG.
GND2
GND4
J7703
818018761
A7705
18nH
0402
±2%
A7704
0R
±5%
0201
J7702
818002131
SIG.
GND2
GND4
J7704
818018761
A7706
33pF
0201
50V
5%
J7705
XM-217-XC-186-SP
J7706
XM-217-XC-186-SP

Title	K1
Size A3	Document Number <Doc>
Rev	
Date: Thursday, December 24, 2020	Sheet

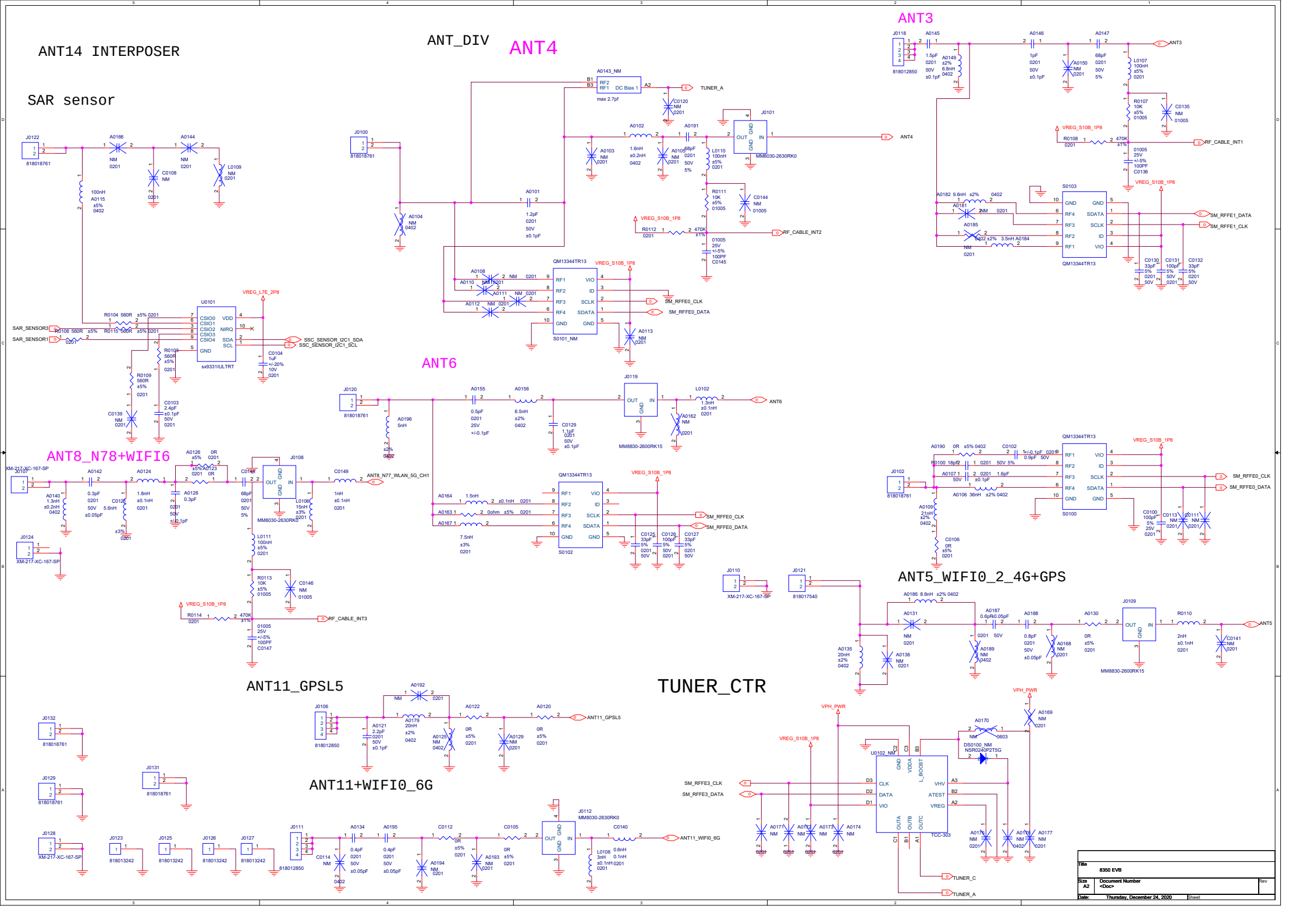
ANT14 INTERPOSER
SAR sensor
ANT_DIV
ANT4
ANT3
ANT6
ANT8_N78+WIFI6
ANT5_WIFI0_2_4G+GPS
ANT11_GPSL5
ANT11+WIFI0_6G
TUNER_CTR
TUNER_A
ANT4
ANT3
ANT6
ANT8_N78_WLAN_5G_CH1
ANT5
ANT11_GPSL5
ANT11_WIFI0_6G
RF_CABLE_INT1
RF_CABLE_INT2
RF_CABLE_INT3
SM_RFFE1_DATA
SM_RFFE1_CLK
SM_RFFE0_CLK
SM_RFFE0_DATA
SSC_SENSOR_I2C1_SDA
SSC_SENSOR_I2C1_SCL
SAR_SENSOR3
SAR_SENSOR1
VREG_L7E_2P8
VREG_S10B_1P8
VPH_PWR
SM_RFFE3_CLK
SM_RFFE3_DATA
TUNER_C
TUNER_A
Title
8350 EVB
Size
A2
Document Number
<Doc>
Rev
Date:
Thursday, December 24, 2020
Sheet

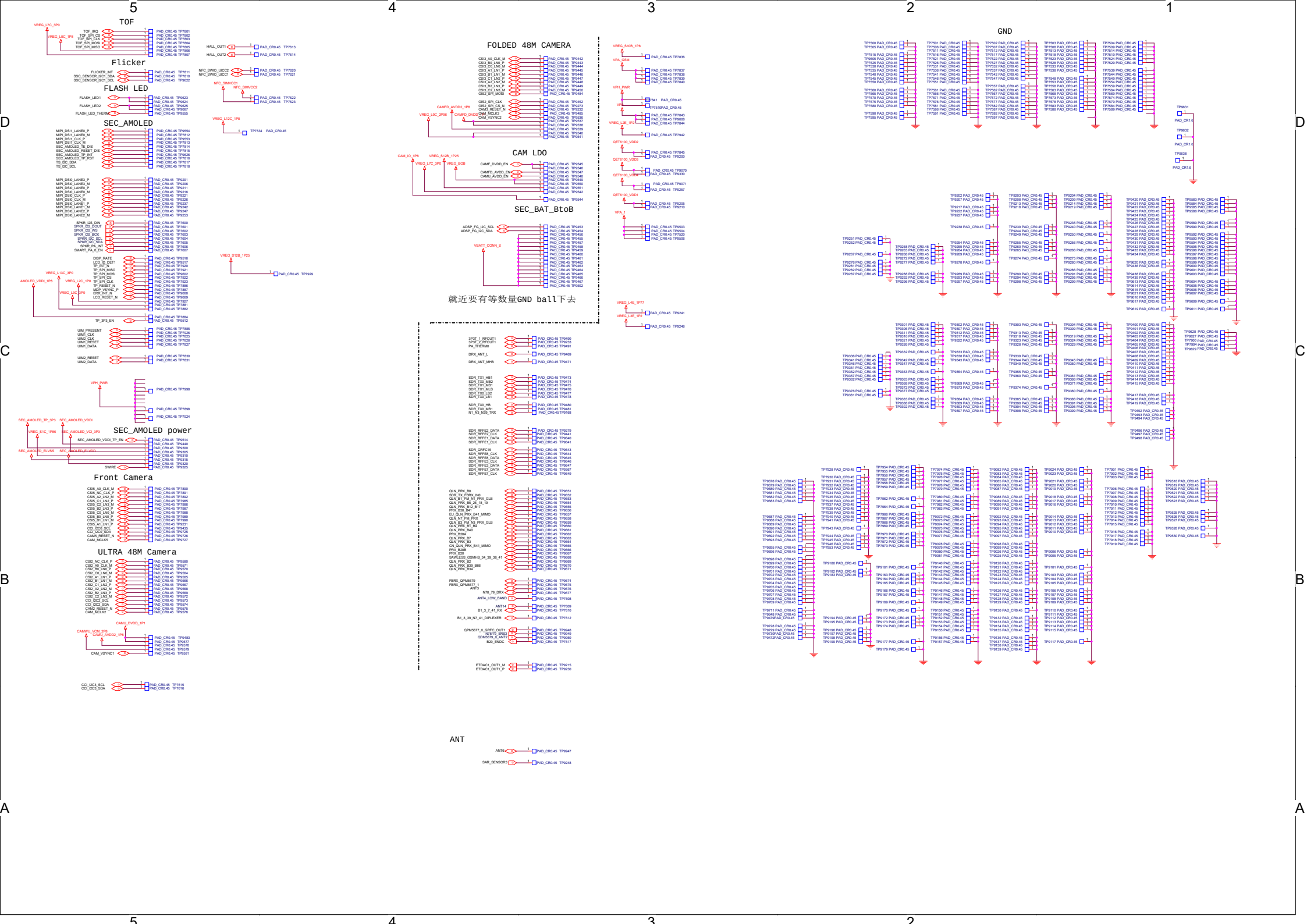
TOF
Flicker
FLASH LED
SEC_AMOLED
FOLDED 48M CAMERA
CAM LDO
SEC_BAT_BtoB
GND
就近要有等数量GND ball下去
SEC_AMOLED power
Front Camera
ULTRA 48M Camera
ANT

ANT13_B32

ANT12 INTERPOSER

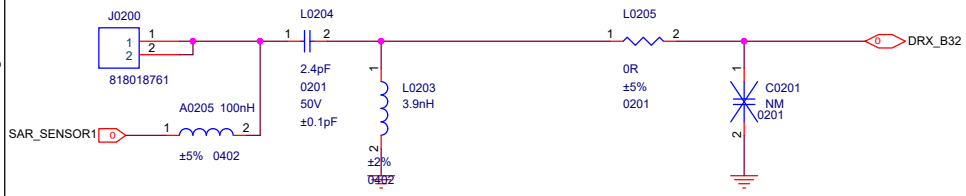

ANT7_1/3/7

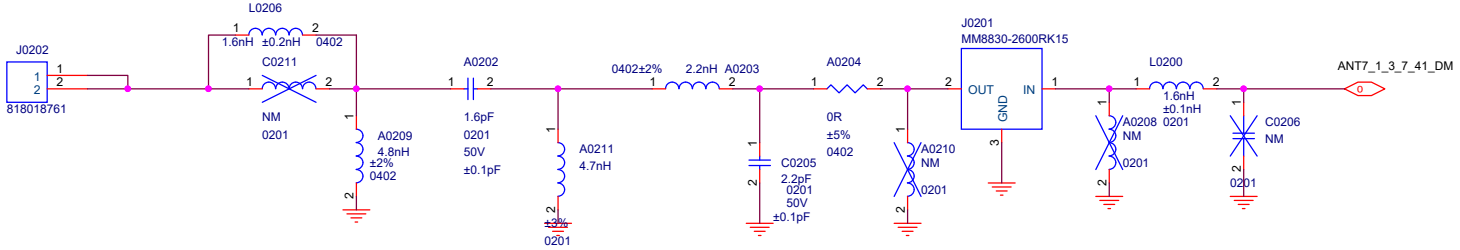

Title	8350 EVB	
Size A3	Document Number Reserved(for ANT)	Rev
Date: Thursday, December 24, 2020	Sheet	

ANT9(N78/79+N40/41_Rx)

INTERPOSER

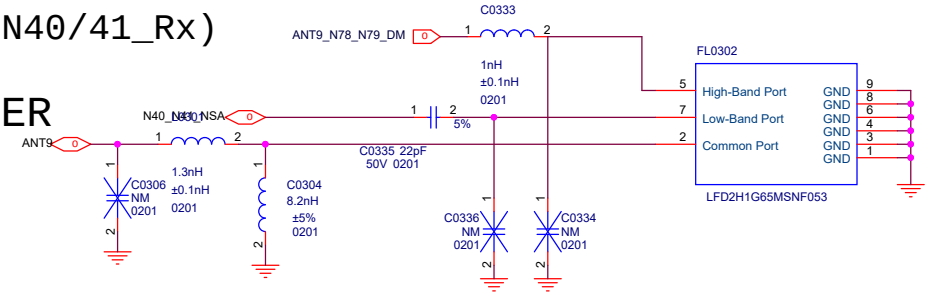

ANT1(LB)

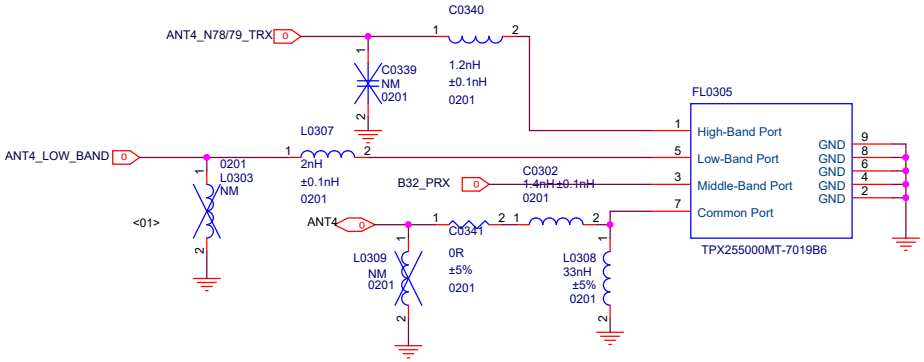

Title	8350 EVB	
Size A3	Document Number PRX	Rev
Date: Thursday, December 24, 2020	Sheet	

ANT7_N1/N3/N7(PAGE05)

ANT14_N78+N79 (PAGE20)

ANT4_MHB(PAGE21)

ANT15_B32_DRx (PAGE05)

ANT12(N78+N41)

ANT13(N41+N79)

Title	8350 EVB	
Size A3	Document Number Reserved(for ANT)	Rev
Date: Thursday, December 24, 2020	Sheet	

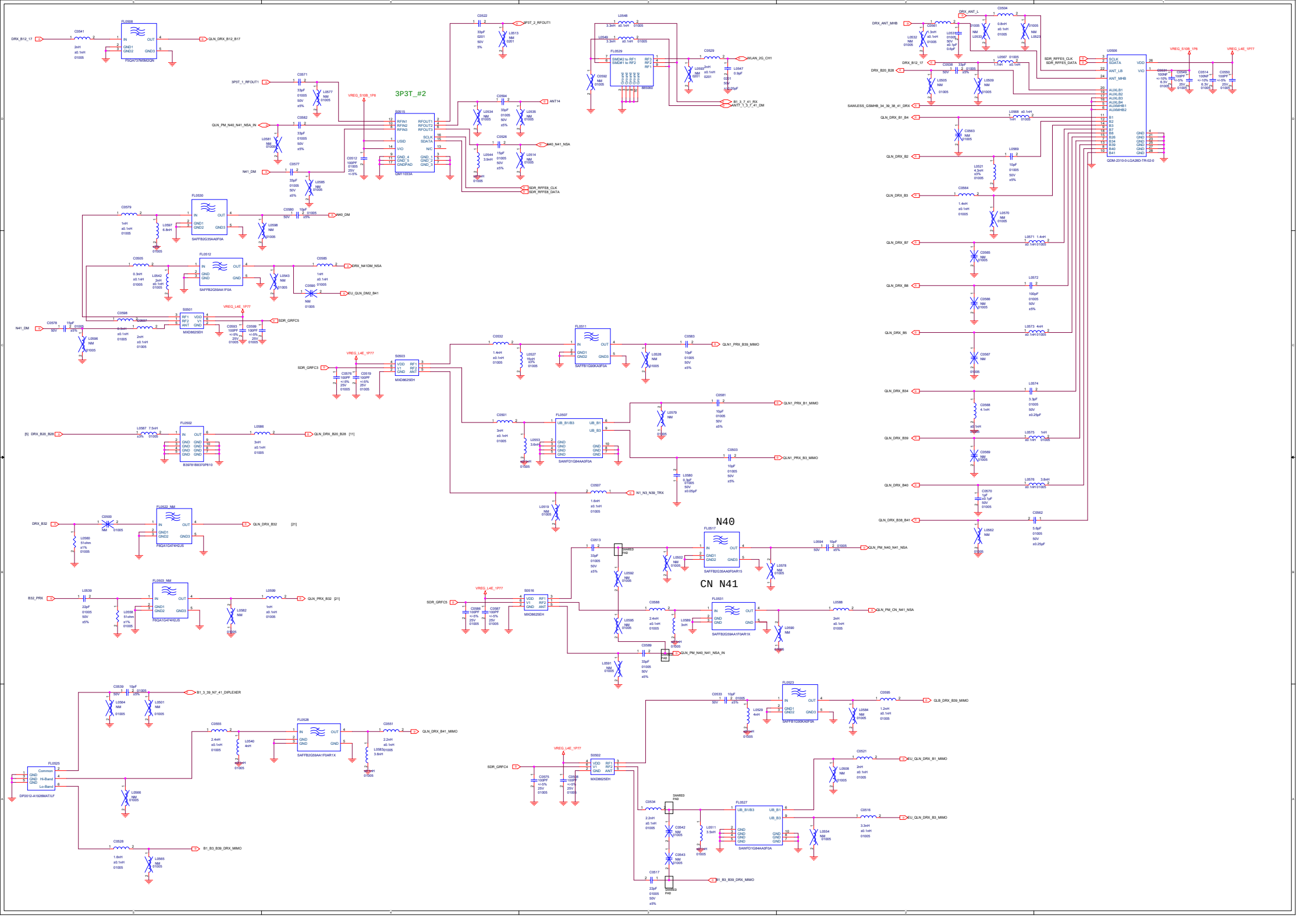
3P3T_#2
N40
CN N41
U0506
QDM-2310-0-LGA28D-TR-02-0
S0515
QM11033A
FL0508
FSQA737M9M2GN
FL0530
SAFFB2G35AA0F0A
FL0512
SAFFB2G59AA1F0A
S0501
MXD8625EH
S0503
MXD8625EH
FL0511
SAFFB1G90KA0F0A
FL0502
B39781B8370P810
FL0507
SAWFD1G84AA0F0A
FL0522_NM
FSQA1G474HZJ5
FL0525_NM
FSQA1G474HZJ5
FL0517
SAFFB2G35AA0F0AR15
S0516
MXD8625EH
FL0531
SAFFB2G59AA1F0AR1X
FL0523
SAFFB1G90KA0F0A
FL0528
SAFFB2G59AA1F0AR1X
FL0525
DP2012-A1928MATLF
S0502
MXD8625EH
FL0527
SAWFD1G84AA0F0A

LB S-PAD INTERPOSER

Title	8350 EVB	
Size A3	Document Number PA1	Rev
Date: Thursday, December 24, 2020	Sheet	

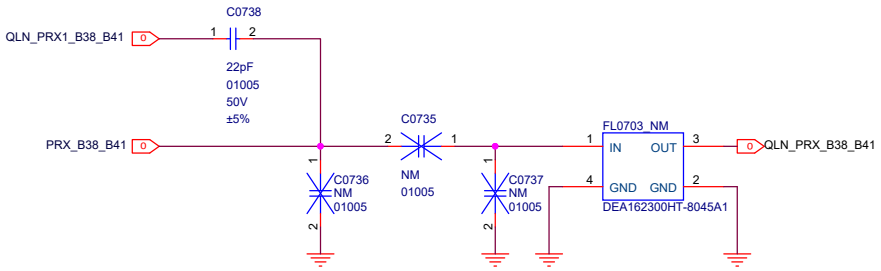

Title	8350 EVB	
Size A3	Document Number PA2	Rev
Date: Thursday, December 24, 2020	Sheet	

INTERPOSER

Title	8350 EVB	
Size A3	Document Number Reserved(for PA)	Rev
Date: Thursday, December 24, 2020	Sheet	

DC FOR 4G

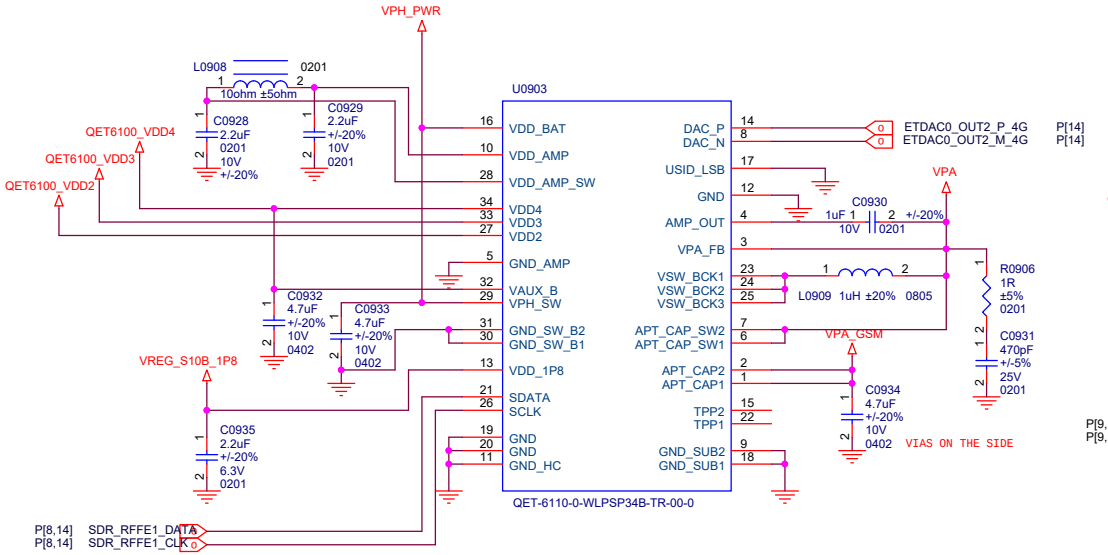

DC FOR QPA5581

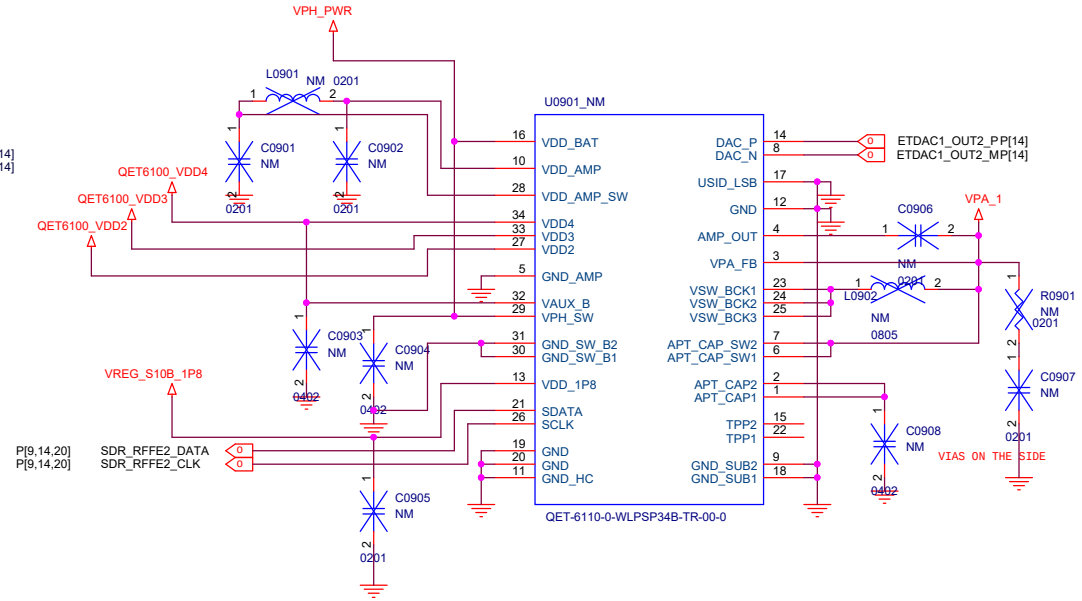

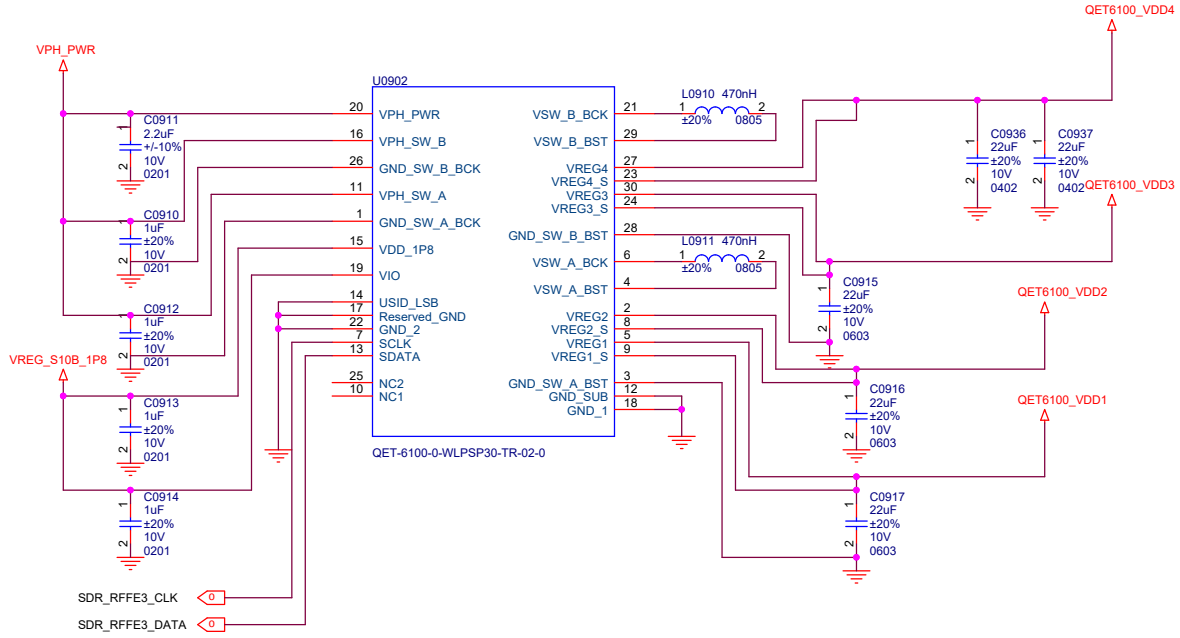

Title	8350 EVB	
Size A3	Document Number RF DC-DC	Rev
Date: Thursday, December 24, 2020	Sheet	

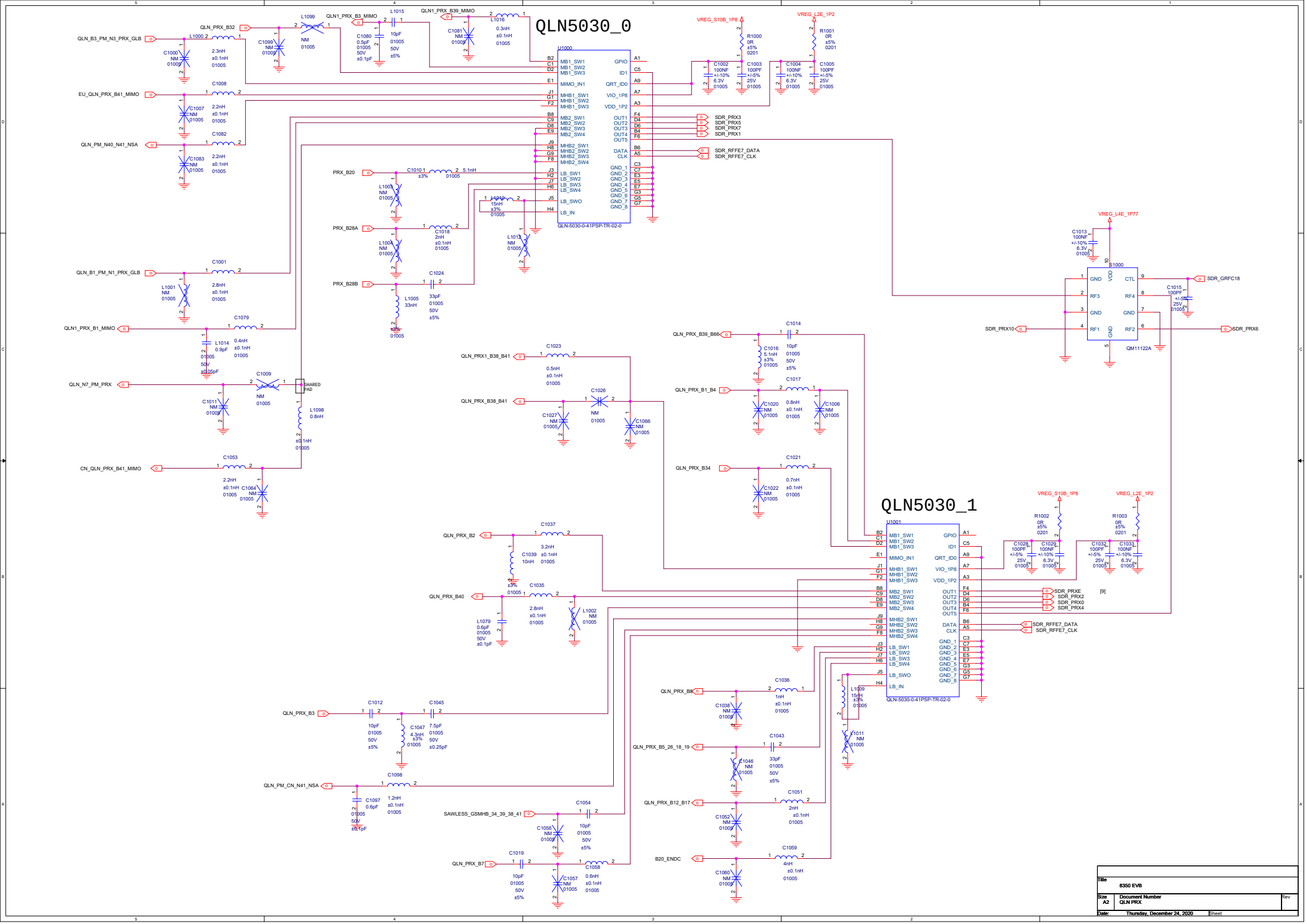
QLN5030_0
U1000
QLN-5030-0-41PSP-TR-02-0
QLN5030_1
U1001
QLN-5030-0-41PSP-TR-02-0
B1000
QM11122A
VREG_S10B_1P8
VREG_L2E_1P2
VREG_L4E_1P77
QLN_PRX_B32
QLN_B3_PM_N3_PRX_GLB
EU_QLN_PRX_B41_MIMO
QLN_PM_N40_N41_NSA
QLN_B1_PM_N1_PRX_GLB
QLN1_PRX_B1_MIMO
QLN_N7_PM_PRX
CN_QLN_PRX_B41_MIMO
QLN1_PRX_B3_MIMO
QLN1_PRX_B39_MIMO
PRX_B20
PRX_B28A
PRX_B28B
SHARED PAD
SDR_PRX3
SDR_PRX5
SDR_PRX7
SDR_PRX1
SDR_RFFE7_DATA
SDR_RFFE7_CLK
SDR_GRFC18
SDR_PRX10
SDR_PRX6
QLN_PRX_B39_B66
QLN_PRX1_B38_B41
QLN_PRX_B38_B41
QLN_PRX_B1_B4
QLN_PRX_B34
QLN_PRX_B2
QLN_PRX_B40
QLN_PRX_B3
QLN_PM_CN_N41_NSA
SAWLESS_GSMHB_34_39_38_41
QLN_PRX_B7
QLN_PRX_B8
QLN_PRX_B5_26_18_19
QLN_PRX_B12_B17
B20_ENDC
SDR_PRXE
SDR_PRX2
SDR_PRX0
SDR_PRX4
[9]
Title
83S0 EVB
Size
A2
Document Number
QLN PRX
Rev
Date:
Thursday, December 24, 2020
Sheet

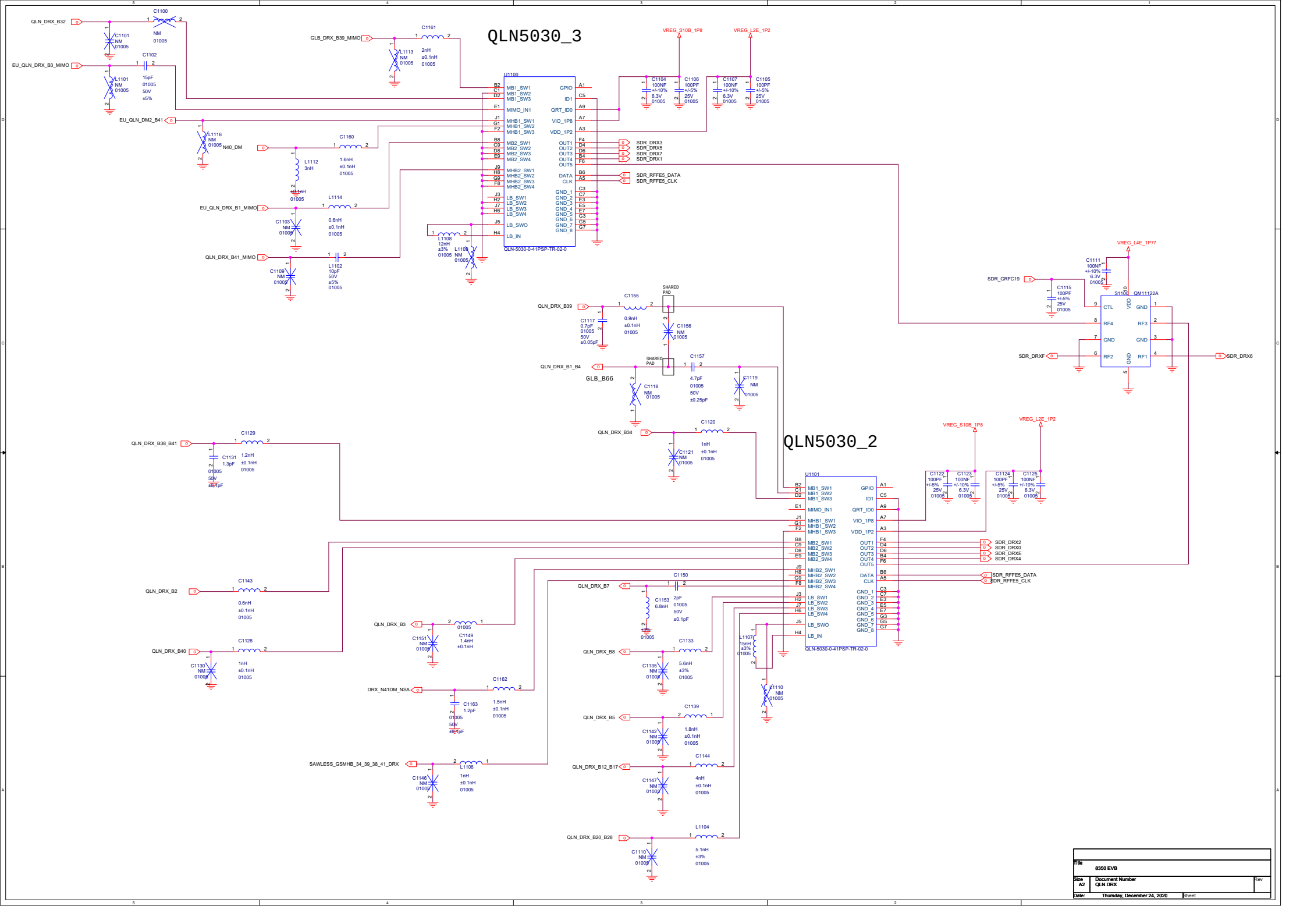
QLN5030_3
QLN5030_2
U1100
U1101
QLN-5030-0-41PSP-TR-02-0
QLN_DRX_B32
EU_QLN_DRX_B3_MIMO
EU_QLN_DM2_B41
N40_DM
EU_QLN_DRX_B1_MIMO
QLN_DRX_B41_MIMO
GLB_DRX_B39_MIMO
VREG_S10B_1P8
VREG_L2E_1P2
VREG_L4E_1P77
SDR_DRX3
SDR_DRX5
SDR_DRX7
SDR_DRX1
SDR_RFFE5_DATA
SDR_RFFE5_CLK
SDR_GRFC19
SDR_DRXF
SDR_DRX6
QLN_DRX_B39
QLN_DRX_B1_B4
GLB_B66
QLN_DRX_B34
QLN_DRX_B38_B41
QLN_DRX_B2
QLN_DRX_B40
QLN_DRX_B7
QLN_DRX_B3
DRX_N41DM_NSA
QLN_DRX_B8
QLN_DRX_B5
SAWLESS_GSMHB_34_39_38_41_DRX
QLN_DRX_B12_B17
QLN_DRX_B20_B28
SHARED PAD
S1100
QM11122A
SDR_DRX2
SDR_DRX0
SDR_DRXE
SDR_DRX4
Title
8350 EVB
Size
A2
Document Number
QLN DRX
Rev
Date:
Thursday, December 24, 2020
Sheet

Title	8350 EVB
Size A3	Document Number Reserved(for LNA)
Rev	
Date: Thursday, December 24, 2020	Sheet

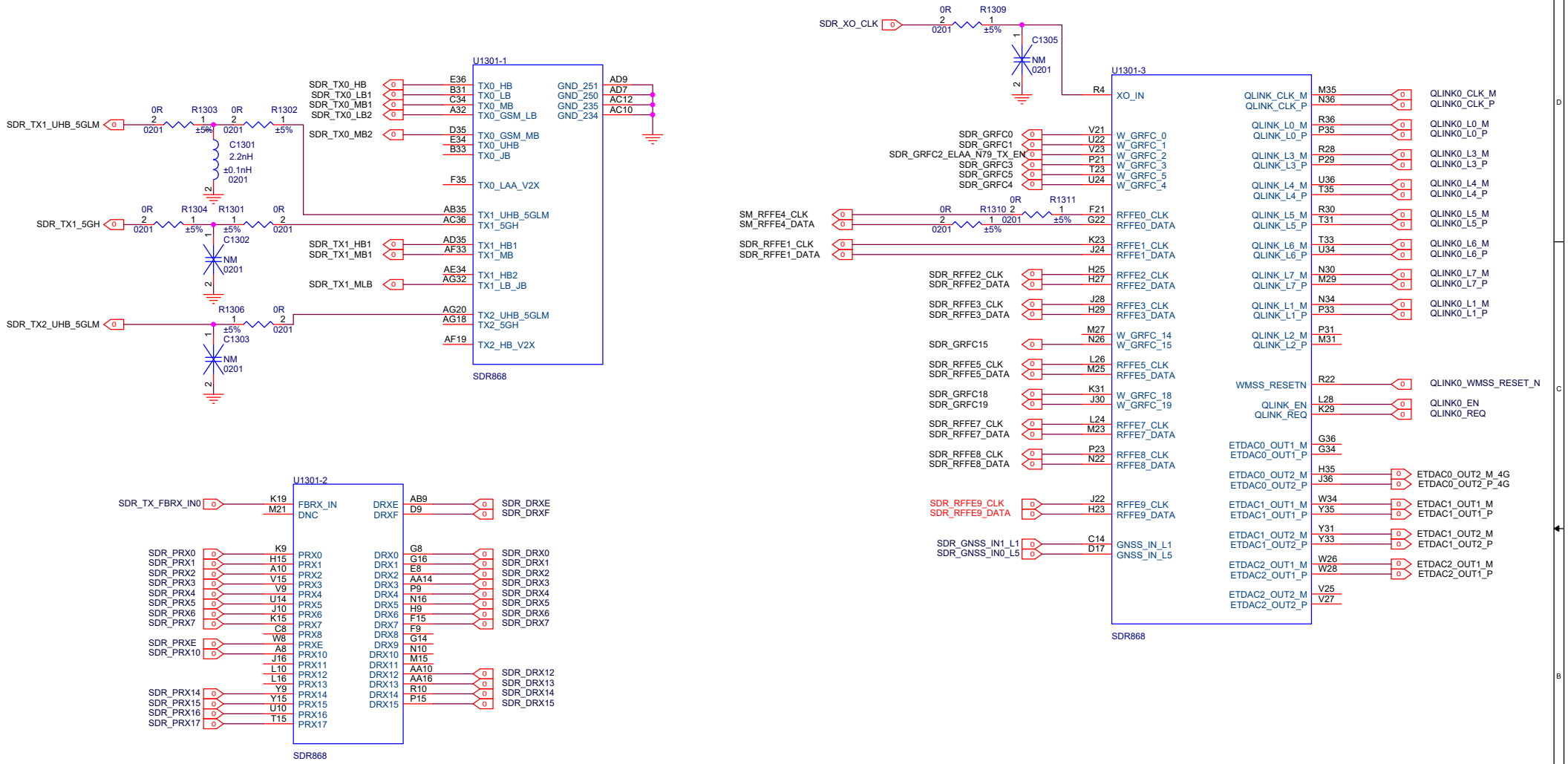

Title	8350 EVB	
Size A3	Document Number WTR Interface	Rev
Date: Thursday, December 24, 2020	Sheet	

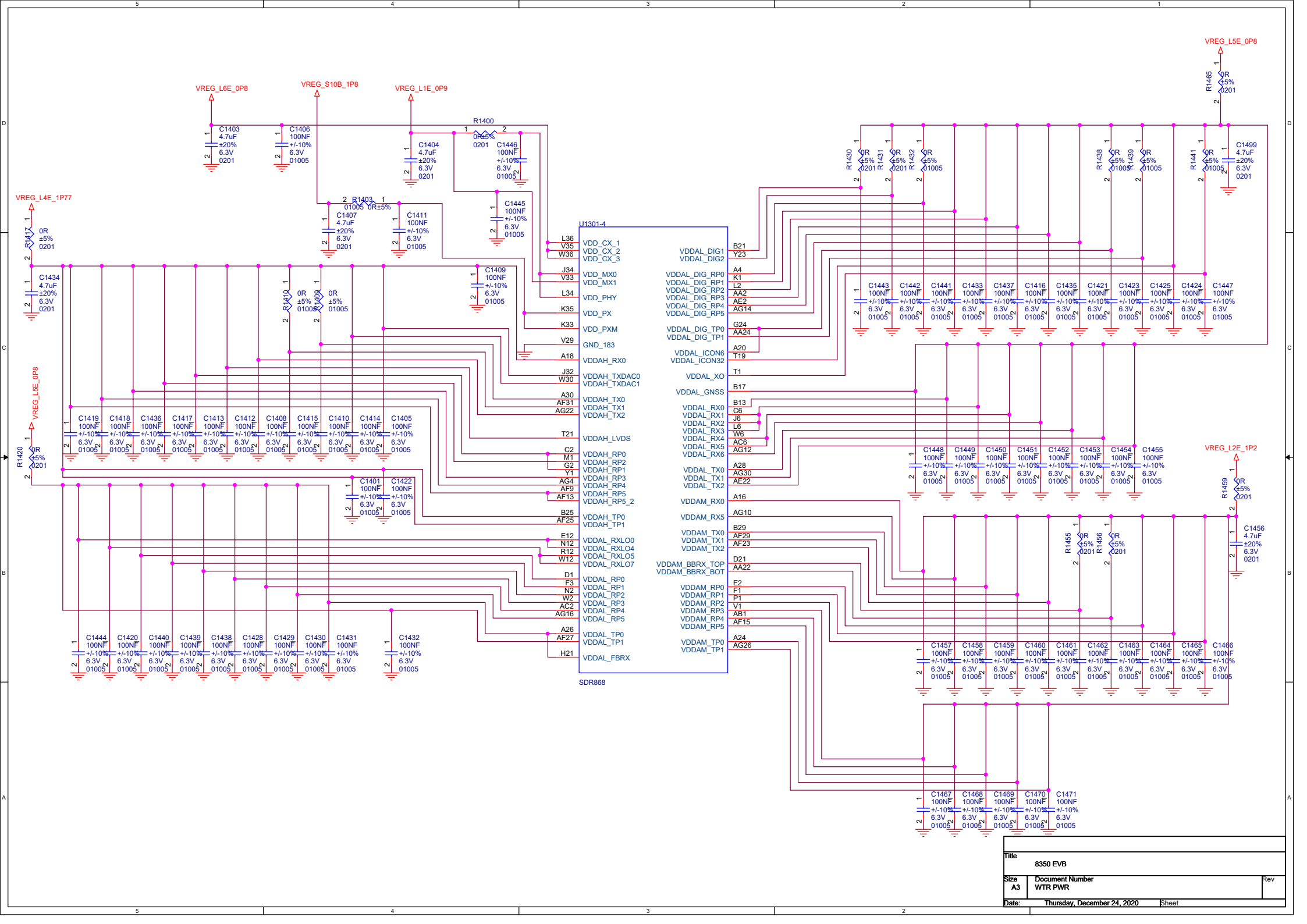
VREG_L6E_0P8
VREG_S10B_1P8
VREG_L1E_0P9
VREG_L5E_0P8
VREG_L4E_1P77
VREG_L5E_0P8
VREG_L2E_1P2
R1400
R1403
R1465
R1417
R1410
R1409
R1420
R1430
R1431
R1432
R1438
R1439
R1441
R1455
R1456
R1459
U1301-4
SDR868
VDD_CX_1
VDD_CX_2
VDD_CX_3
VDD_MX0
VDD_MX1
VDD_PHY
VDD_PX
VDD_PXM
GND_183
VDDAH_RX0
VDDAH_TXDAC0
VDDAH_TXDAC1
VDDAH_TX0
VDDAH_TX1
VDDAH_TX2
VDDAH_LVDS
VDDAH_RP0
VDDAH_RP2
VDDAH_RP1
VDDAH_RP3
VDDAH_RP4
VDDAH_RP5
VDDAH_RP5_2
VDDAH_TP0
VDDAH_TP1
VDDAL_RXLO0
VDDAL_RXLO4
VDDAL_RXLO5
VDDAL_RXLO7
VDDAL_RP0
VDDAL_RP1
VDDAL_RP2
VDDAL_RP3
VDDAL_RP4
VDDAL_RP5
VDDAL_TP0
VDDAL_TP1
VDDAL_FBRX
VDDAL_DIG1
VDDAL_DIG2
VDDAL_DIG_RP0
VDDAL_DIG_RP1
VDDAL_DIG_RP2
VDDAL_DIG_RP3
VDDAL_DIG_RP4
VDDAL_DIG_RP5
VDDAL_DIG_TP0
VDDAL_DIG_TP1
VDDAL_ICON6
VDDAL_ICON32
VDDAL_XO
VDDAL_GNSS
VDDAL_RX0
VDDAL_RX1
VDDAL_RX2
VDDAL_RX3
VDDAL_RX4
VDDAL_RX5
VDDAL_RX6
VDDAL_TX0
VDDAL_TX1
VDDAL_TX2
VDDAM_RX0
VDDAM_RX5
VDDAM_TX0
VDDAM_TX1
VDDAM_TX2
VDDAM_BBRX_TOP
VDDAM_BBRX_BOT
VDDAM_RP0
VDDAM_RP1
VDDAM_RP2
VDDAM_RP3
VDDAM_RP4
VDDAM_RP5
VDDAM_TP0
VDDAM_TP1
Title
8350 EVB
Size
A3
Document Number
WTR PWR
Rev
Date:
Thursday, December 24, 2020
Sheet

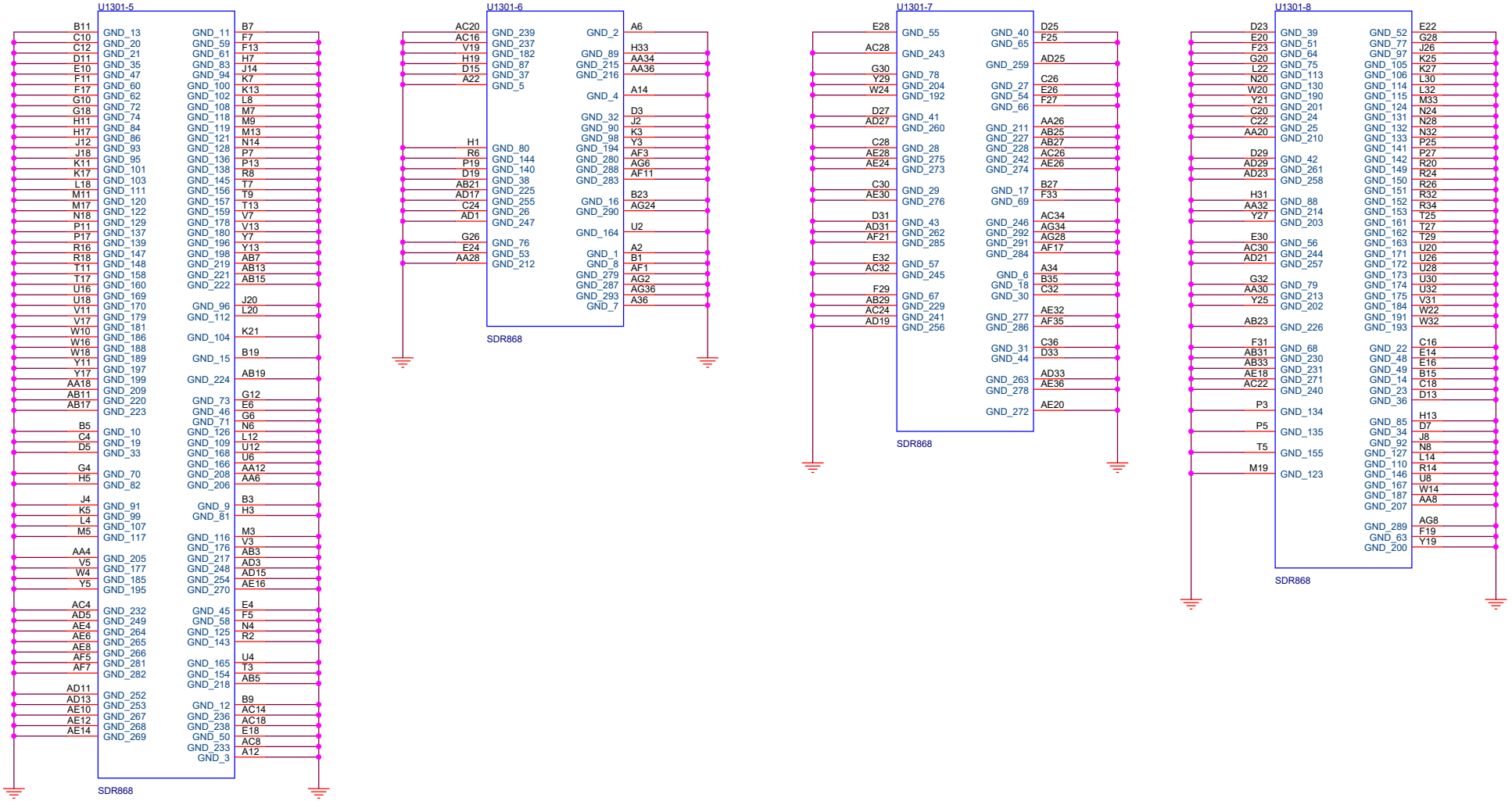

Title	8350 EVB	
Size A3	Document Number Reserved(for WTR)	Rev
Date: Thursday, December 24, 2020	Sheet	

Title	K1
Size A3	Document Number Reserved(for 5G-sub 6G)
Rev	
Date: Thursday, December 24, 2020	Sheet

Title	K1
Size A3	Document Number Reserved(for MM Wave)
Rev	
Date: Thursday, December 24, 2020	Sheet

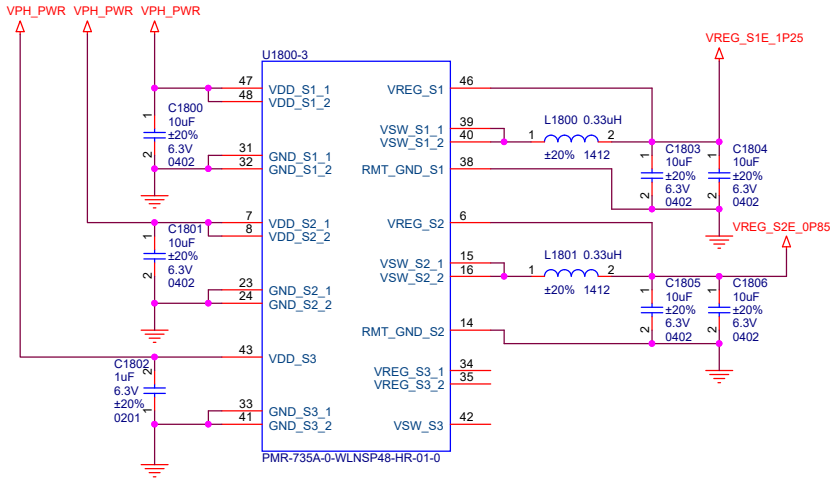

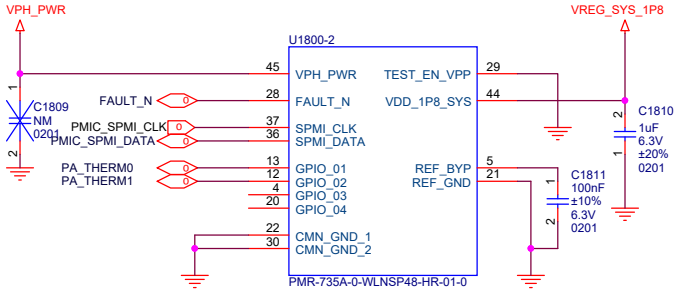

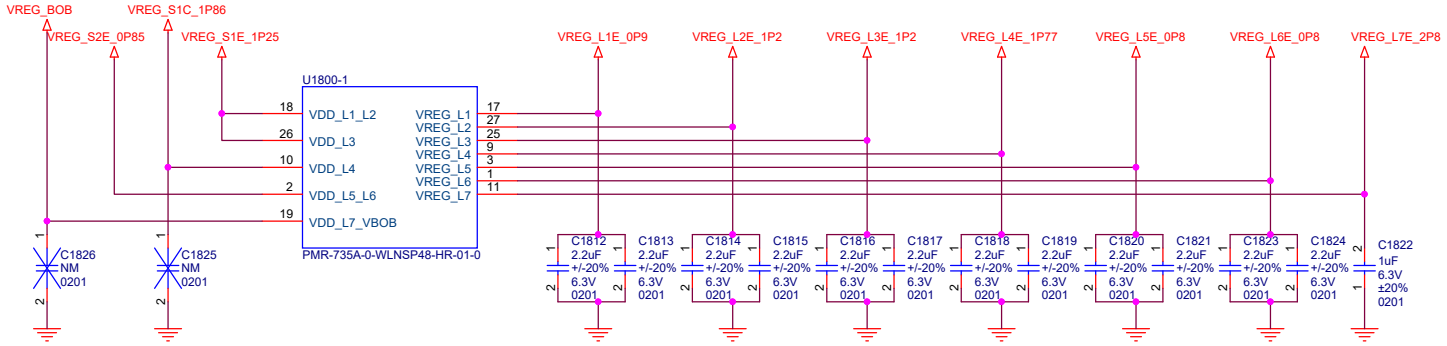

Title	K1	
Size A3	Document Number Reserved(for 5G-WTR I)	Rev
Date: Thursday, December 24, 2020	Sheet	

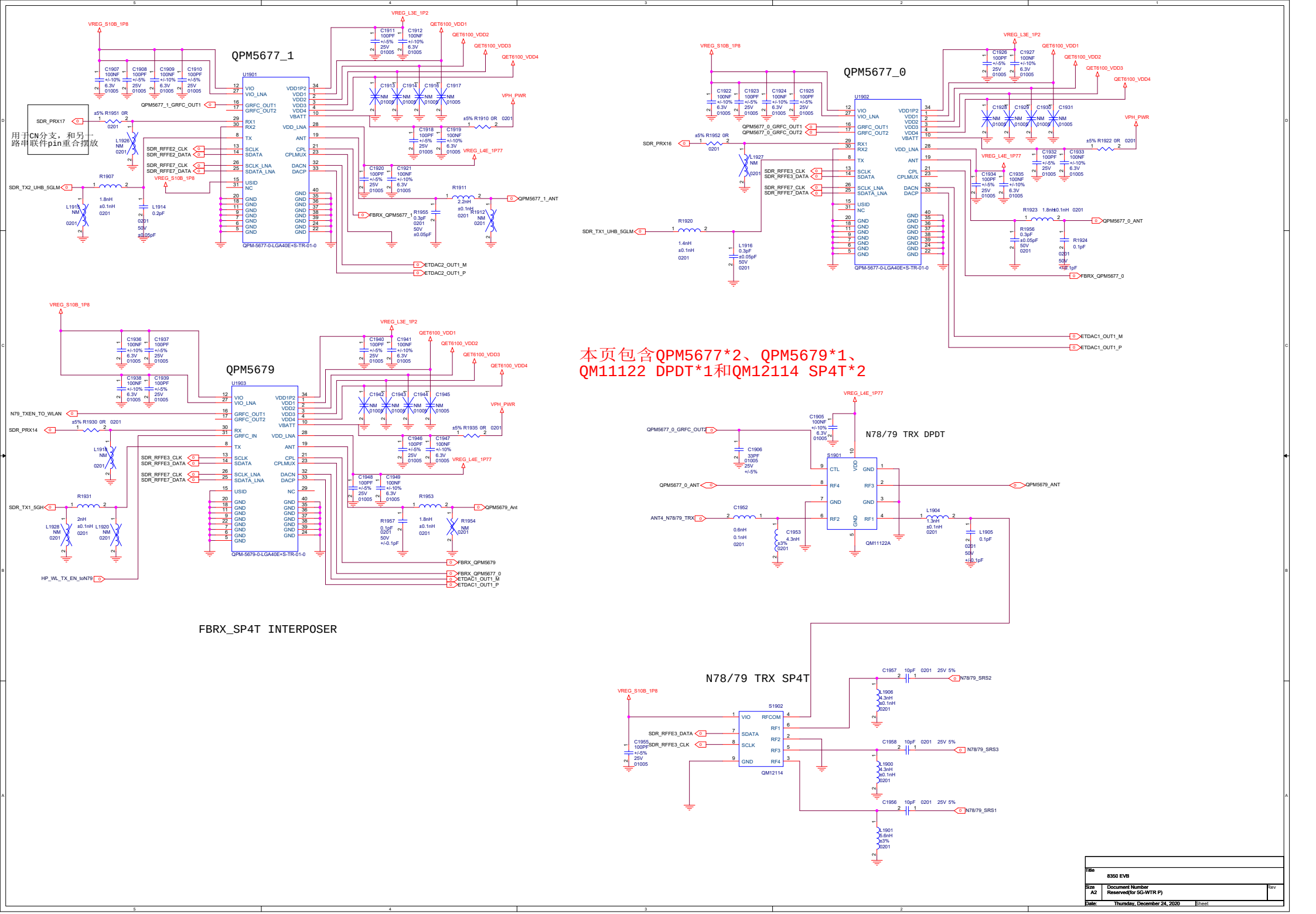
QPM5677_1
QPM5677_0
N78/79 TRX DPDT
N78/79 TRX SP4T
QM11122A
QM12114
QPM-5677-0-LGA40E+S-TR-01-0
QPM-5679-0-LGA40E+S-TR-01-0
用于CN分支，和另一路串联件pin重合摆放
本页包含QPM5677*2、QPM5679*1、QM11122 DPDT*1和QM12114 SP4T*2
FBRX_SP4T INTERPOSER
Title
8350 EVB
Size
A2
Document Number
Reserved(for 5G-WTR P)
Rev
Date:
Thursday, December 24, 2020
Sheet

本页包含QDM5579*3和旁边的DPDT*2

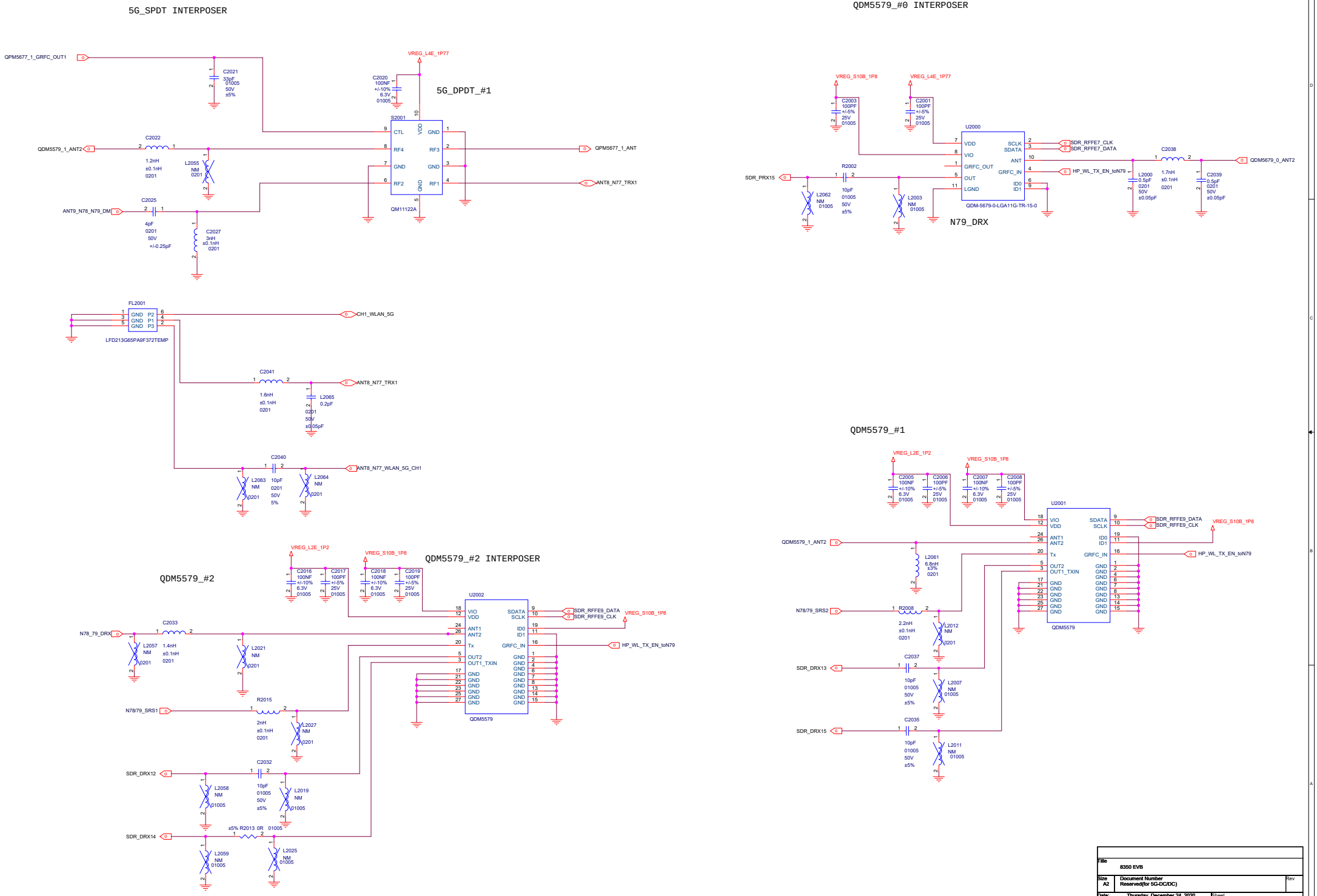

QPM5641

INTERPOSER

本页包含QPM5641到Ant4的网络， 并兼容QPM6585

3P3T_1, IN口
为临近天线端

Title	8350 EVB	
Size A2	Document Number 5G N41	Rev
Date: Thursday, December 24, 2020	Sheet	

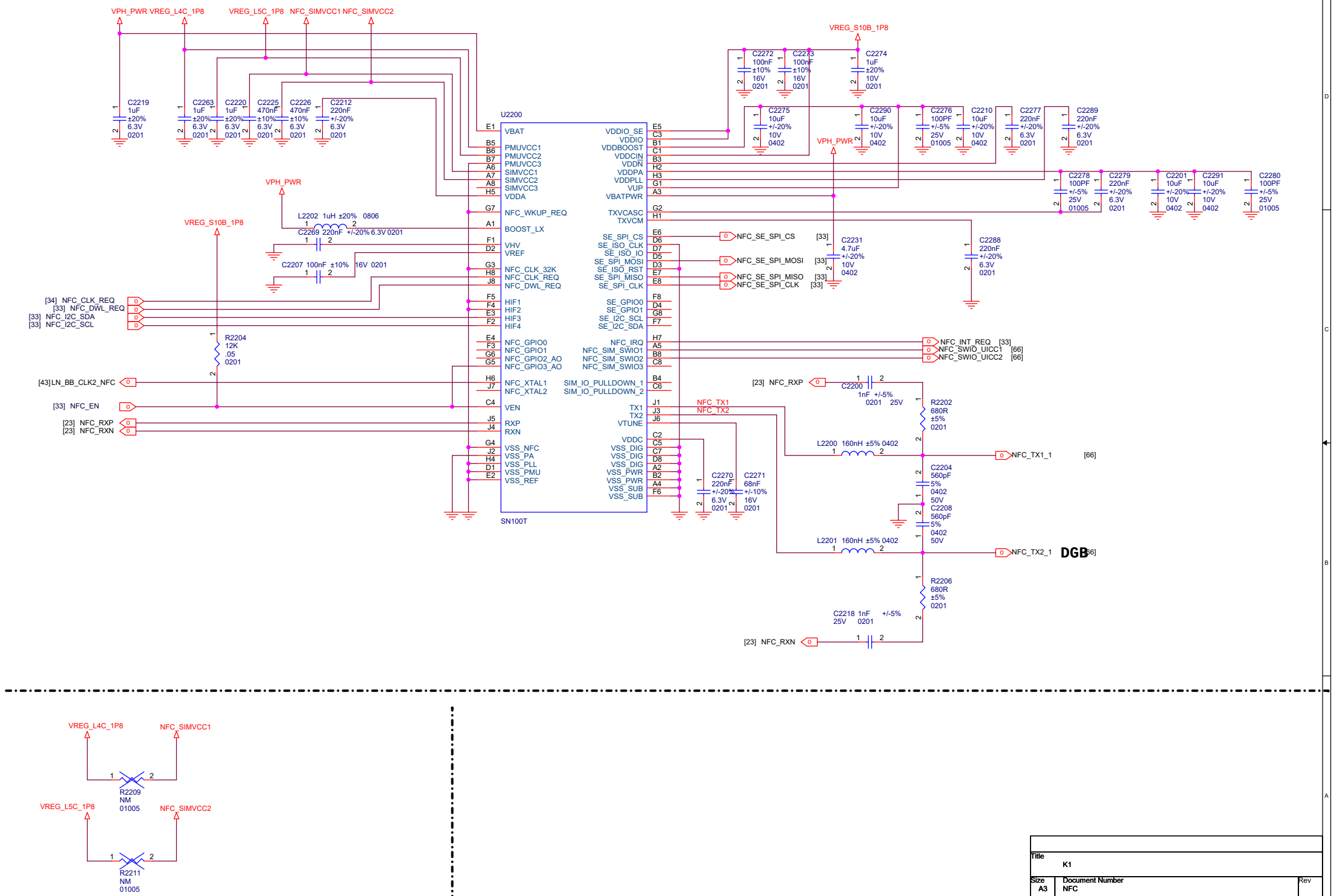

Title	K1
Size A3	Document Number NFC
Rev	
Date:	Thursday, December 24, 2020
Sheet	

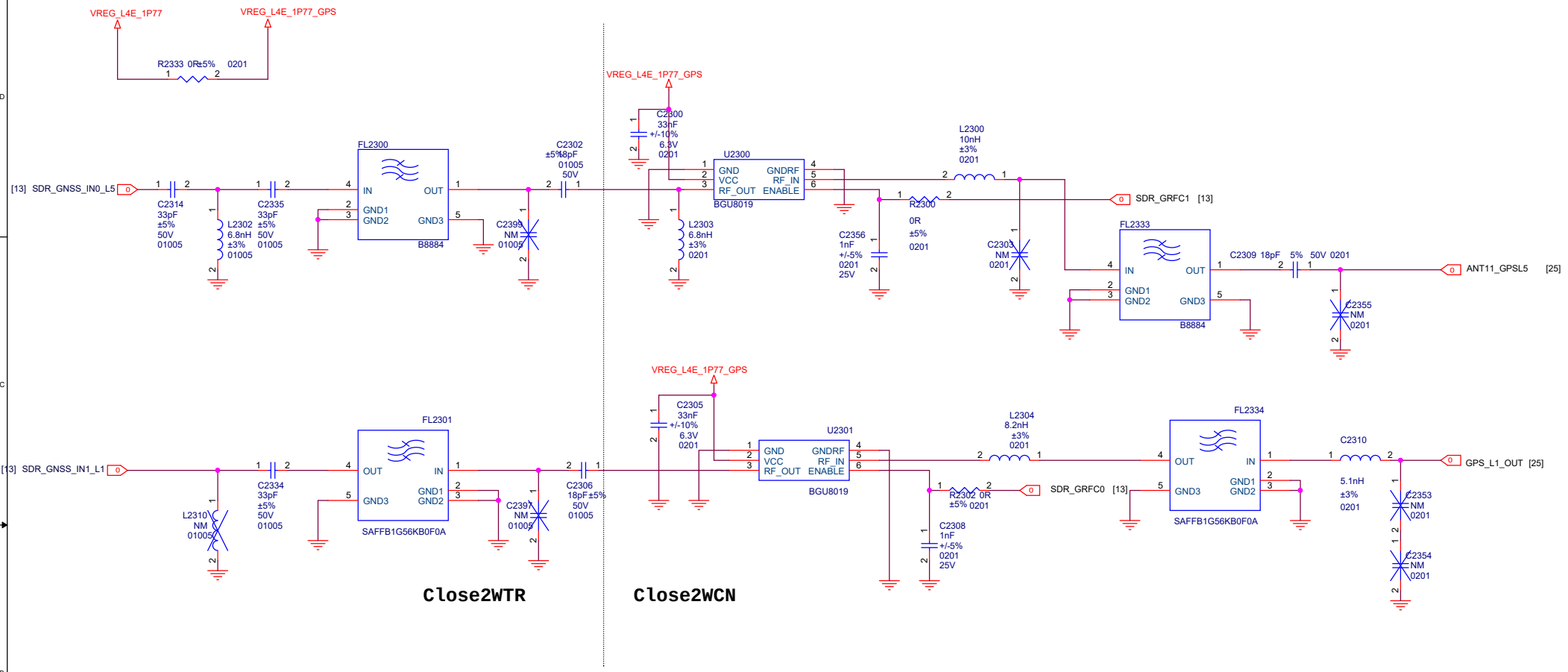

Title	K1	
Size A3	Document Number GPS	Rev
Date: Thursday, December 24, 2020	Sheet	

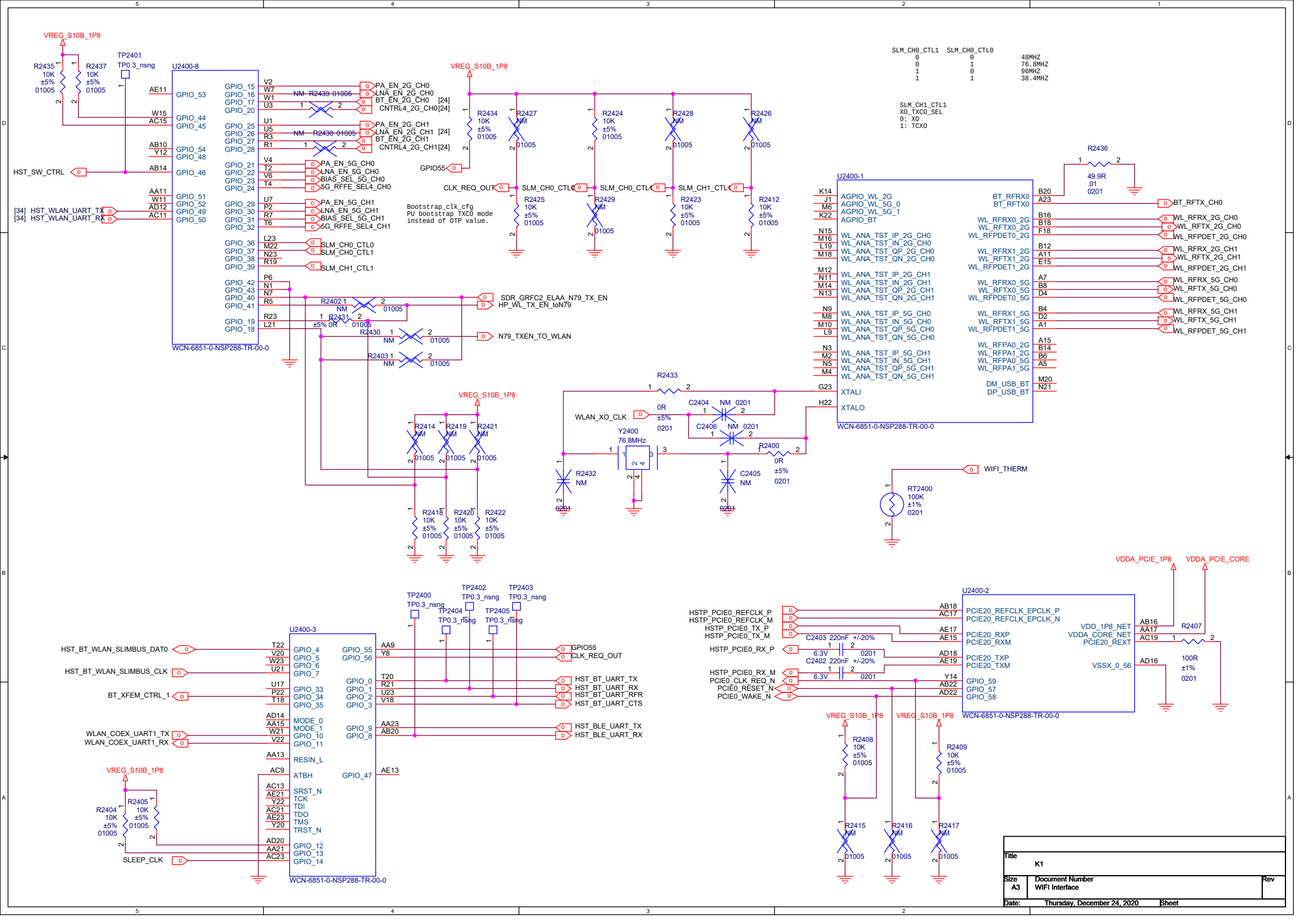
VREG_S10B_1P8
R2435 10K ±5% 01005
R2437 10K ±5% 01005
TP2401 TP0.3_nsng
U2400-8
WCN-6851-0-NSP288-TR-00-0
HST_SW_CTRL
[34] HST_WLAN_UART_TX
[34] HST_WLAN_UART_RX
PA_EN_2G_CH0
LNA_EN_2G_CH0
BT_EN_2G_CH0 [24]
CNTRL4_2G_CH0[24]
NM R2439 01005
PA_EN_2G_CH1
LNA_EN_2G_CH1 [24]
BT_EN_2G_CH1
CNTRL4_2G_CH1[24]
NM R2438 01005
PA_EN_5G_CH0
LNA_EN_5G_CH0
BIAS_SEL_5G_CH0
5G_RFFE_SEL4_CH0
PA_EN_5G_CH1
LNA_EN_5G_CH1
BIAS_SEL_5G_CH1
5G_RFFE_SEL4_CH1
SLM_CH0_CTL0
SLM_CH0_CTL1
SLM_CH1_CTL1
GPIO55
CLK_REQ_OUT
R2434 10K ±5% 01005
R2427 NM 01005
R2424 NM 01005
R2428 NM 01005
R2426 NM 01005
R2425 10K ±5% 01005
R2429 NM 01005
R2423 10K ±5% 01005
R2412 10K ±5% 01005
Bootstrap_clk_cfg
PU bootstrap TXCO mode
instead of OTP value.
SDR_GRFC2_ELAA_N79_TX_EN
HP_WL_TX_EN_toN79
N79_TXEN_TO_WLAN
R2402 NM 01005
R2431 ±5% 0R 01005
R2430 NM 01005
R2403 NM 01005
R2414 NM 01005
R2419 NM 01005
R2421 NM 01005
R2418 10K ±5% 01005
R2420 10K ±5% 01005
R2422 10K ±5% 01005
SLM_CH0_CTL1 SLM_CH0_CTL0
0 0 48MHZ
0 1 76.8MHZ
1 0 96MHZ
1 1 38.4MHZ
SLM_CH1_CTL1
XO_TXCO_SEL
0: XO
1: TCXO
U2400-1
WCN-6851-0-NSP288-TR-00-0
R2436 49.9R .01 0201
BT_RFTX_CH0
WL_RFRX_2G_CH0
WL_RFTX_2G_CH0
WL_RFPDET_2G_CH0
WL_RFRX_2G_CH1
WL_RFTX_2G_CH1
WL_RFPDET_2G_CH1
WL_RFRX_5G_CH0
WL_RFTX_5G_CH0
WL_RFPDET_5G_CH0
WL_RFRX_5G_CH1
WL_RFTX_5G_CH1
WL_RFPDET_5G_CH1
R2433 0R ±5% 0201
C2404 NM 0201
C2406 NM 0201
WLAN_XO_CLK
Y2400 76.8MHz
R2400 0R ±5% 0201
R2432 NM 0201
C2405 NM 0201
WIFI_THERM
RT2400 100K ±1% 0201
U2400-3
WCN-6851-0-NSP288-TR-00-0
TP2400 TP0.3_nsng
TP2404 TP0.3_nsng
TP2402 TP0.3_nsng
TP2405 TP0.3_nsng
TP2403 TP0.3_nsng
HST_BT_WLAN_SLIMBUS_DAT0
HST_BT_WLAN_SLIMBUS_CLK
BT_XFEM_CTRL_1
WLAN_COEX_UART1_TX
WLAN_COEX_UART1_RX
SLEEP_CLK
HST_BT_UART_TX
HST_BT_UART_RX
HST_BT_UART_RFR
HST_BT_UART_CTS
HST_BLE_UART_TX
HST_BLE_UART_RX
R2404 10K ±5% 01005
R2405 10K ±5% 01005
U2400-2
WCN-6851-0-NSP288-TR-00-0
VDDA_PCIE_1P8
VDDA_PCIE_CORE
HSTP_PCIE0_REFCLK_P
HSTP_PCIE0_REFCLK_M
HSTP_PCIE0_TX_P
HSTP_PCIE0_TX_M
HSTP_PCIE0_RX_P
HSTP_PCIE0_RX_M
PCIE0_CLK_REQ_N
PCIE0_RESET_N
PCIE0_WAKE_N
C2403 220nF +/-20% 6.3V 0201
C2402 220nF +/-20% 6.3V 0201
R2407 100R ±1% 0201
R2408 10K ±5% 01005
R2409 10K ±5% 01005
R2415 NM 01005
R2416 NM 01005
R2417 NM 01005
Title K1
Size A3
Document Number WIFI Interface
Rev
Date: Thursday, December 24, 2020
Sheet

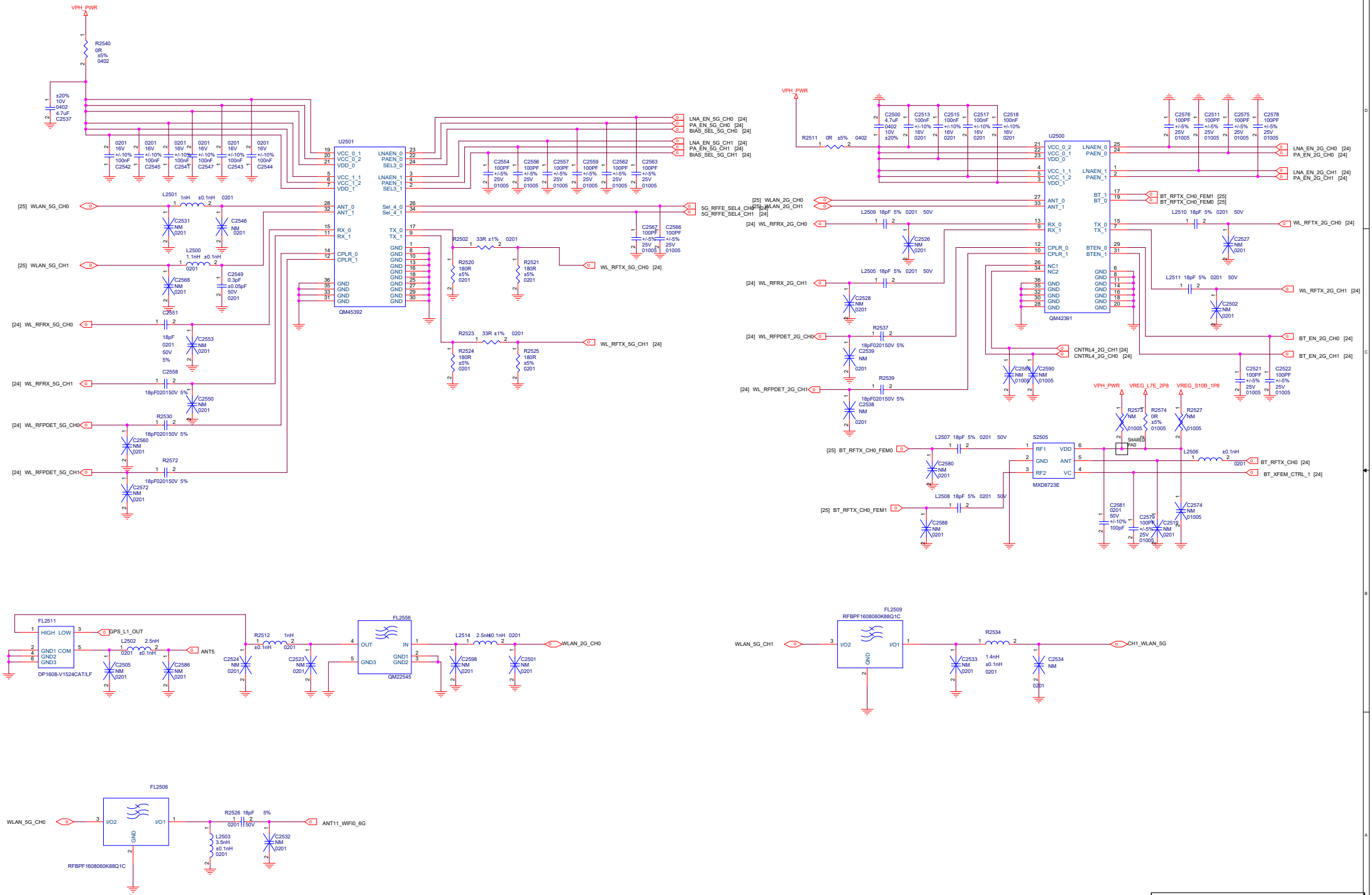
VPH_PWR
R2540 0R ±5% 0402
C2537 4.7uF ±20% 10V 0402
U2501
QM45392
VCC_0_1
VCC_0_2
VDD_0
VCC_1_1
VCC_1_2
VDD_1
LNAEN_0
PAEN_0
SEL3_0
LNAEN_1
PAEN_1
SEL3_1
ANT_0
ANT_1
RX_0
RX_1
CPLR_0
CPLR_1
TX_0
TX_1
Sel_4_0
Sel_4_1
GND
[25] WLAN_5G_CH0
[25] WLAN_5G_CH1
[24] WL_RFRX_5G_CH0
[24] WL_RFRX_5G_CH1
[24] WL_RFPDET_5G_CH0
[24] WL_RFPDET_5G_CH1
LNA_EN_5G_CH0 [24]
PA_EN_5G_CH0 [24]
BIAS_SEL_5G_CH0 [24]
LNA_EN_5G_CH1 [24]
PA_EN_5G_CH1 [24]
BIAS_SEL_5G_CH1 [24]
5G_RFFE_SEL4_CH0 [24]
5G_RFFE_SEL4_CH1 [24]
WL_RFTX_5G_CH0 [24]
WL_RFTX_5G_CH1 [24]
U2500
QM42391
[25] WLAN_2G_CH0
[25] WLAN_2G_CH1
[24] WL_RFRX_2G_CH0
[24] WL_RFRX_2G_CH1
[24] WL_RFPDET_2G_CH0
[24] WL_RFPDET_2G_CH1
BT_RFTX_CH0_FEM1 [25]
BT_RFTX_CH0_FEM0 [25]
WL_RFTX_2G_CH0 [24]
WL_RFTX_2G_CH1 [24]
BT_EN_2G_CH0 [24]
BT_EN_2G_CH1 [24]
CNTRL4_2G_CH1 [24]
CNTRL4_2G_CH0 [24]
LNA_EN_2G_CH0 [24]
PA_EN_2G_CH0 [24]
LNA_EN_2G_CH1 [24]
PA_EN_2G_CH1 [24]
VREG_L7E_2P8
VREG_S10B_1P8
S2505
MXD8723E
[25] BT_RFTX_CH0_FEM0
[25] BT_RFTX_CH0_FEM1
BT_RFTX_CH0 [24]
BT_XFEM_CTRL_1 [24]
FL2511
DP1608-V1524CAT/LF
GPS_L1_OUT
ANT5
FL2556
QM22545
WLAN_2G_CH0
FL2509
RFBPF1608060K88Q1C
WLAN_5G_CH1
CH1_WLAN_5G
FL2506
RFBPF1608060K88Q1C
WLAN_5G_CH0
ANT11_WIFI0_6G
Title
K1
Size
A2
Document Number
WIFI FEM
Rev
Date:
Thursday, December 24, 2020
Sheet

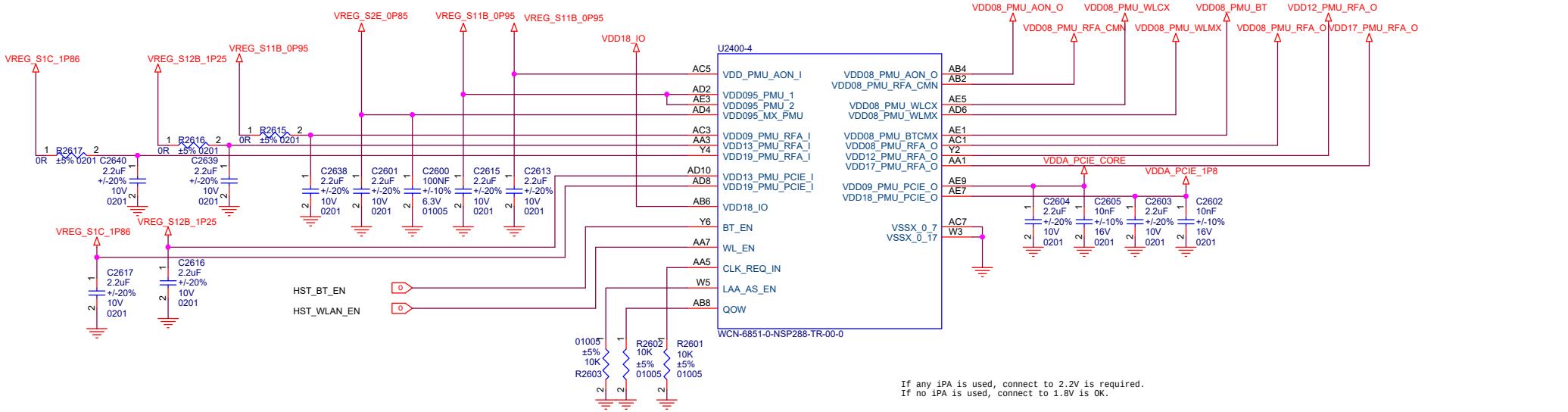

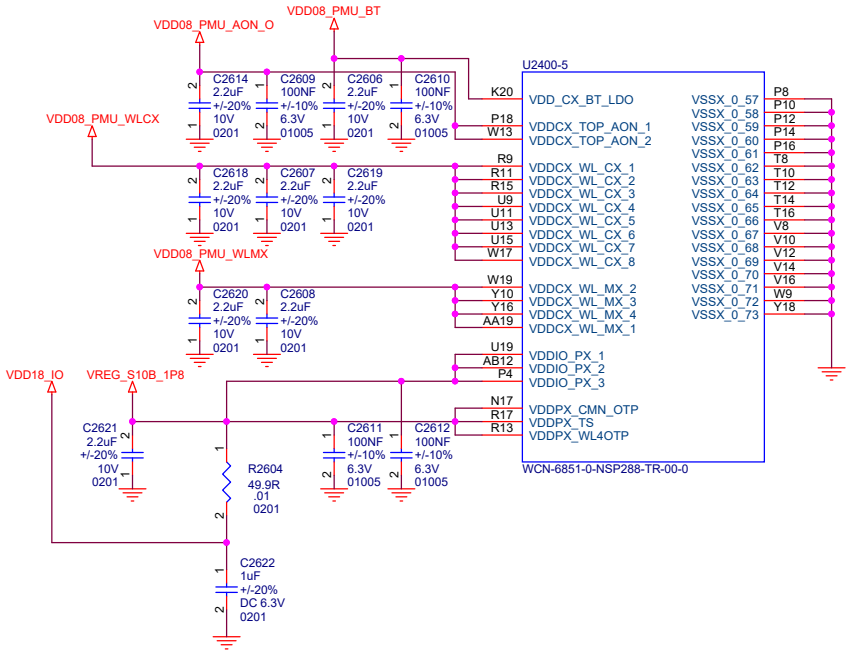

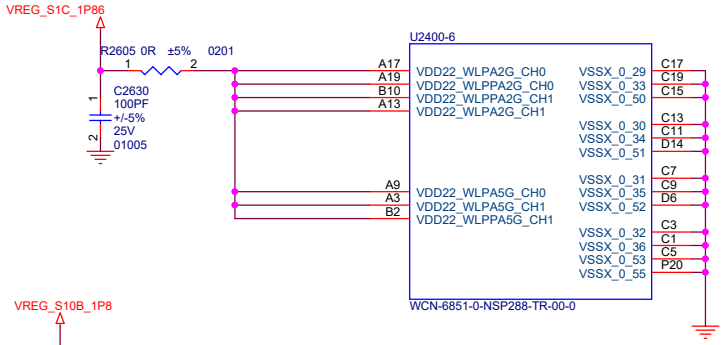

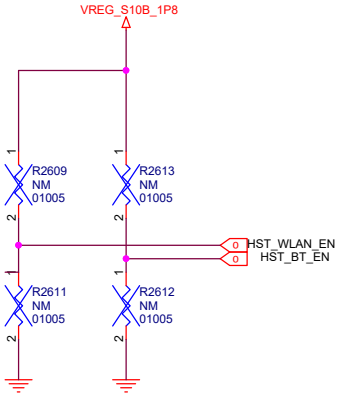

Title	K1	
Size A3	Document Number WIFI Decouping1	Rev
Date: Thursday, December 24, 2020	Sheet	

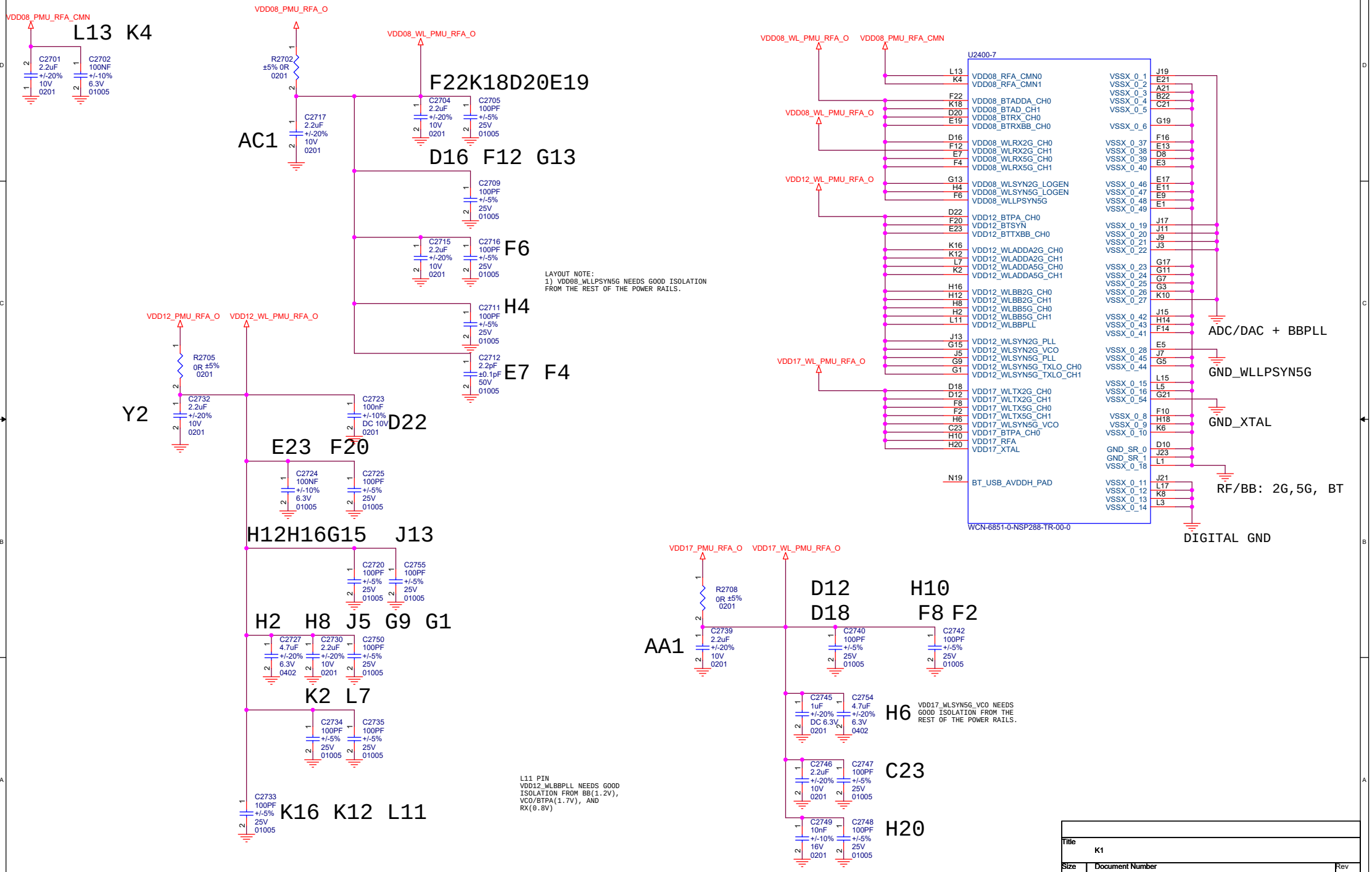

Title	K1	
Size A3	Document Number WIFI Decouping2	Rev
Date: Thursday, December 24, 2020	Sheet	

Title	K1
Size A3	Document Number Reserved(for 11ad/11ax)
Rev	
Date: Thursday, December 24, 2020	Sheet

Title	K1		
Size A3	Document Number UWB-1		Rev
Date: Thursday, December 24, 2020		Sheet	

Title	K1
Size A3	Document Number UWB-2
Rev	
Date: Thursday, December 24, 2020	Sheet

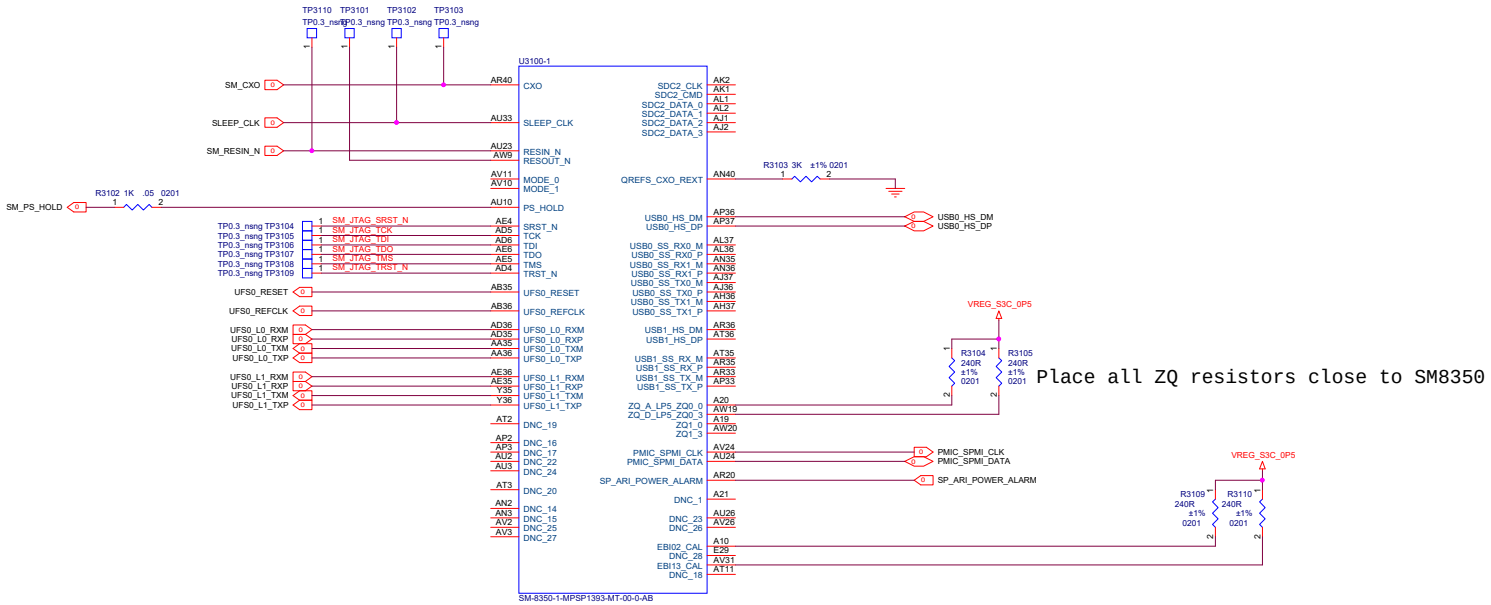

Place all ZQ resistors close to SM8350

MSM skin temperature thermistor

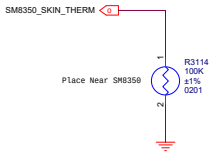

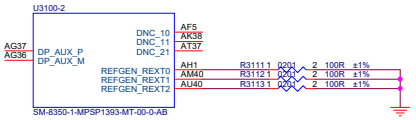

Quiet thermistor Place on a cool place

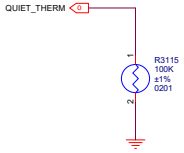

Title	K1	
Size A2	Document Number SM8350 Control	Rev
Date: Thursday, December 24, 2020	Sheet	

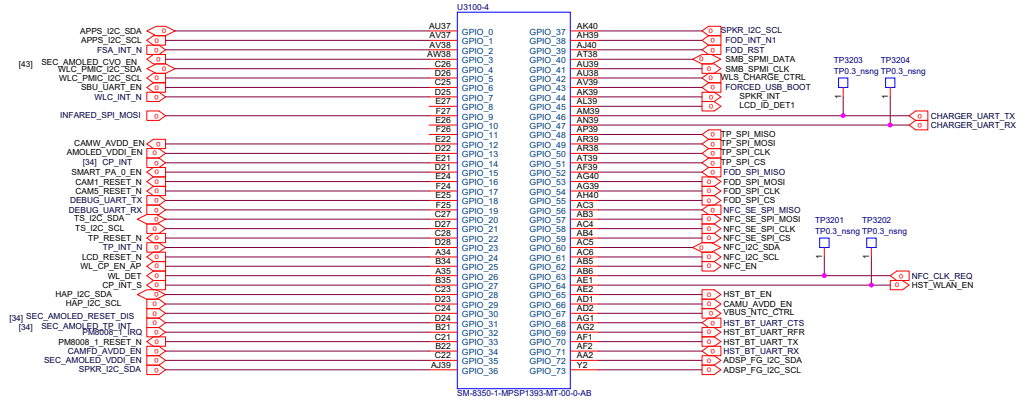

APPS Processor I2C

ADSP I2C

SPKR I2C

ADSP I3C

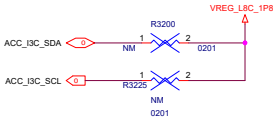

SENSOR I2C1 SAR+FLICKER

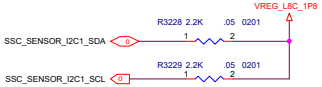

SENSOR I2C4

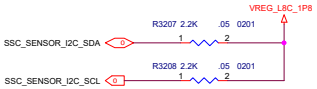

I2C for MAG Sensor

Camera I2C2

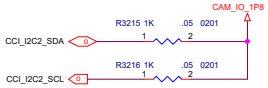

Camera I2C0

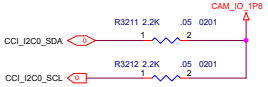

Camera I2C1

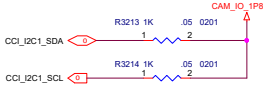

Camera I2C3

NFC I2C

HAP

ADSP I2C

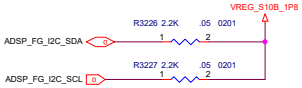

Title	K1	
Size A2	Document Number SDM855 GPIO-1	Rev
Date: Thursday, December 24, 2020	Sheet	

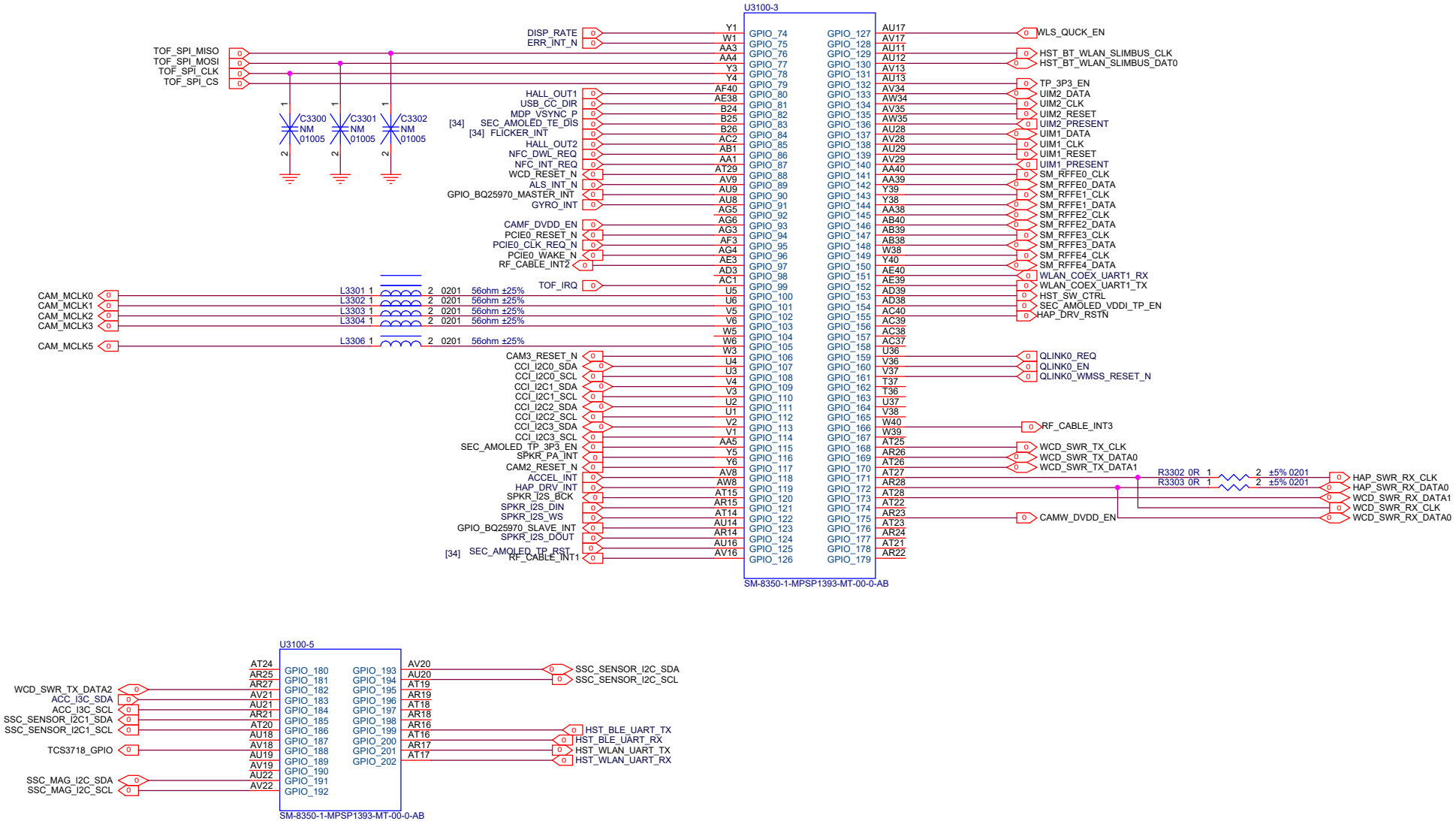

Title	K1	
Size A3	Document Number SDM855 GPIO-2	Rev
Date: Thursday, December 24, 2020	Sheet	

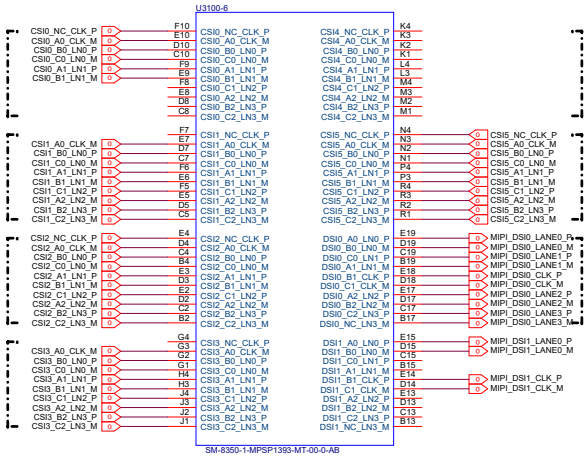

Title	K1	
Size A2	Document Number SDM855 MIPI	Rev
Date: Thursday, December 24, 2020	Sheet	

Title	K1
Size A3	Document Number Reserved(for MIPI)
Rev	
Date: Thursday, December 24, 2020	Sheet

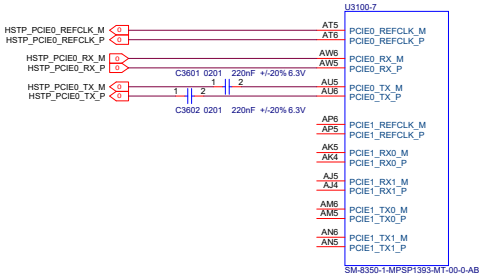

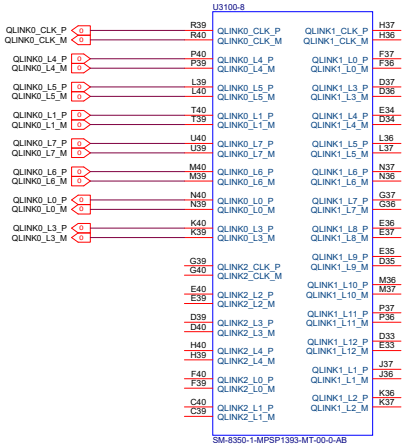

Title	K1	
Size A2	Document Number SDM855 RF INTF	Rev
Date: Thursday, December 24, 2020	Sheet	

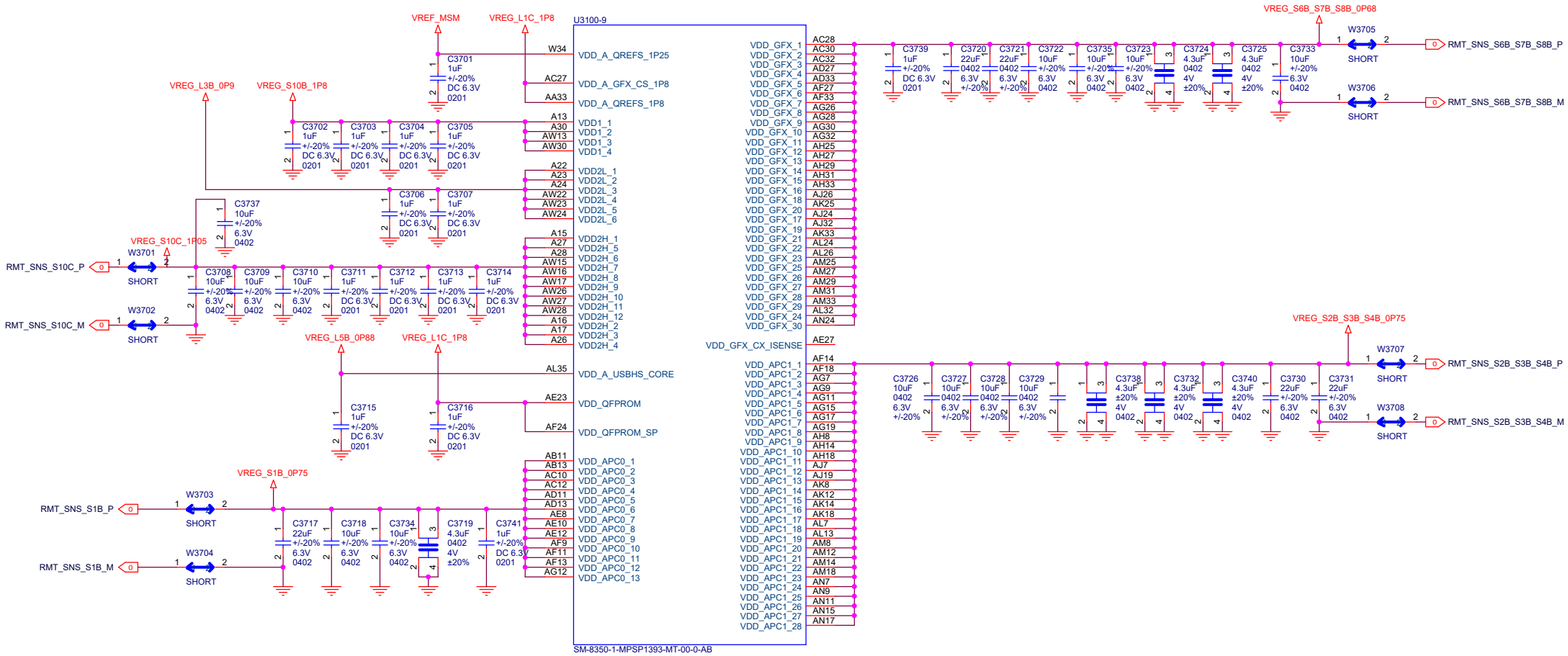

Title	K1
Size A3	Document Number SDM855 PWR1
Rev	
Date: Thursday, December 24, 2020	Sheet

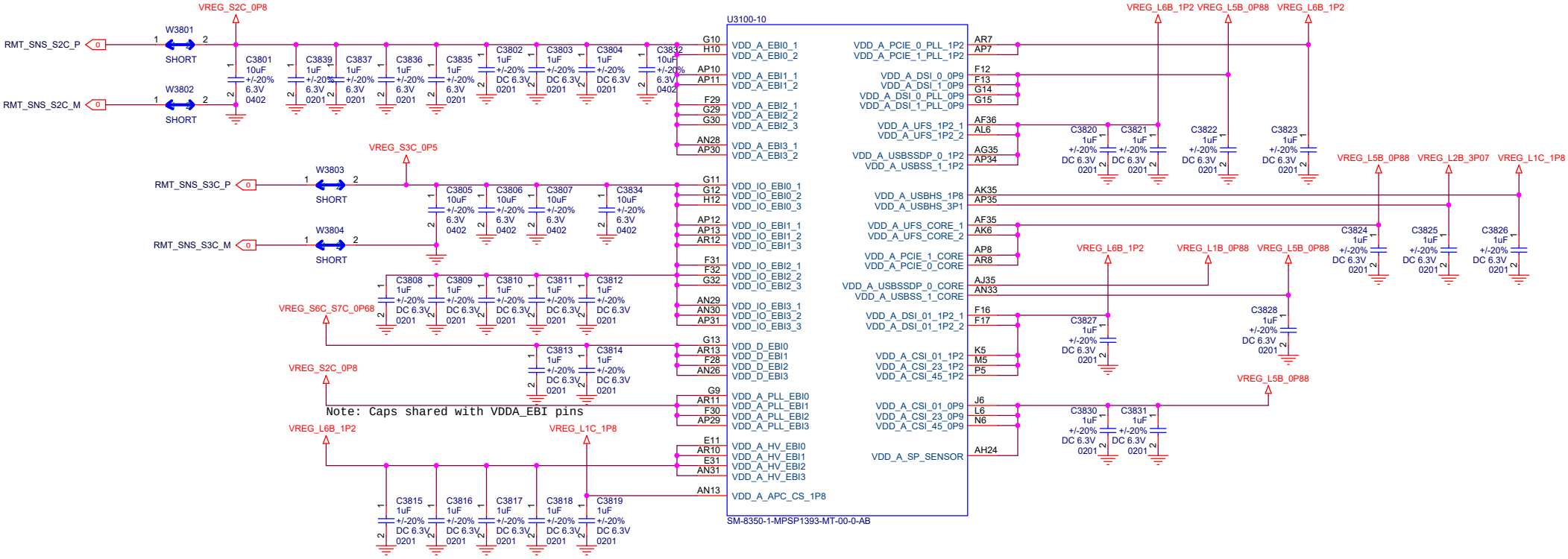

Title	K1	
Size A3	Document Number SDM855 PWR2	Rev
Date: Thursday, December 24, 2020	Sheet	

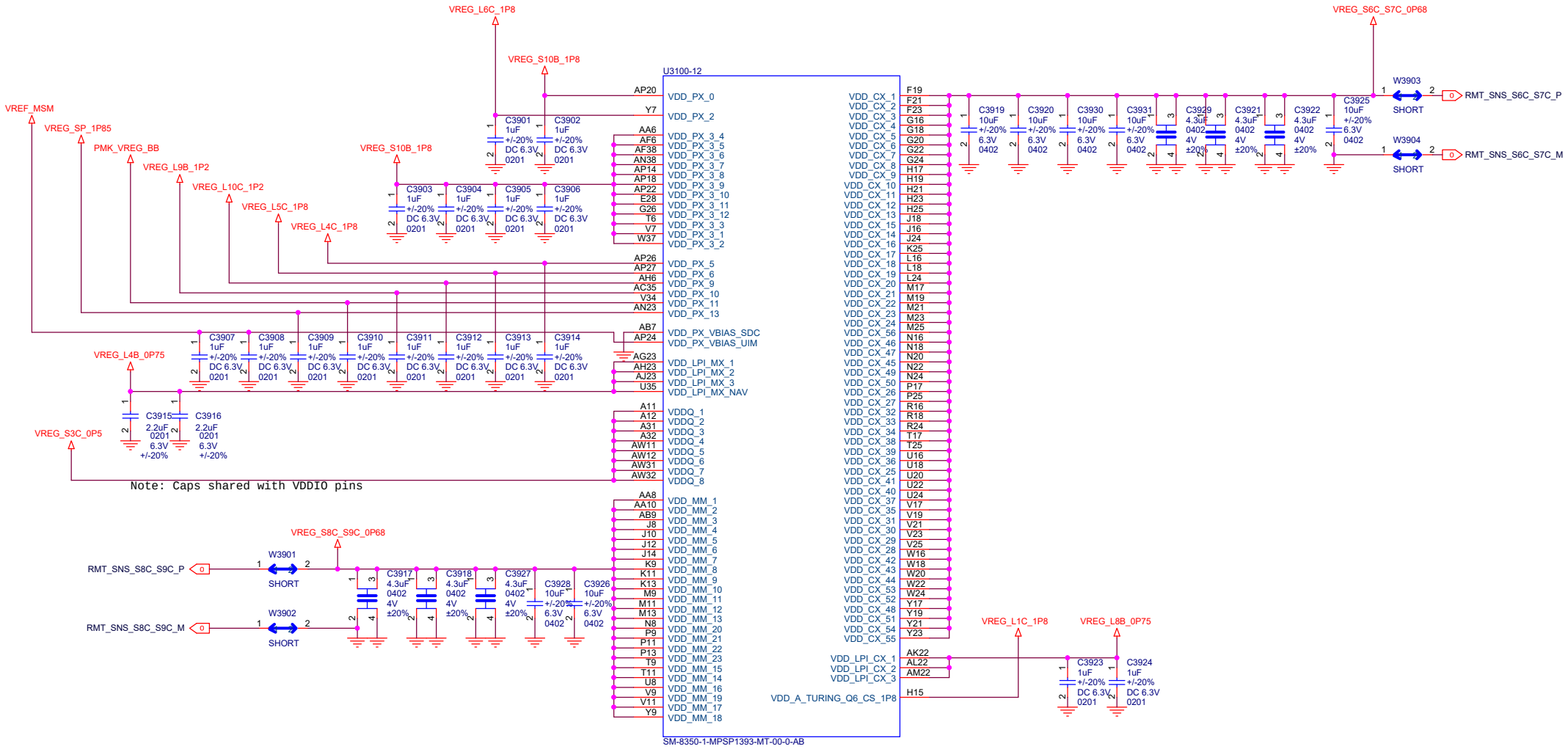

Title	K1	
Size A3	Document Number SDM855 PWR3	Rev
Date: Thursday, December 24, 2020	Sheet	

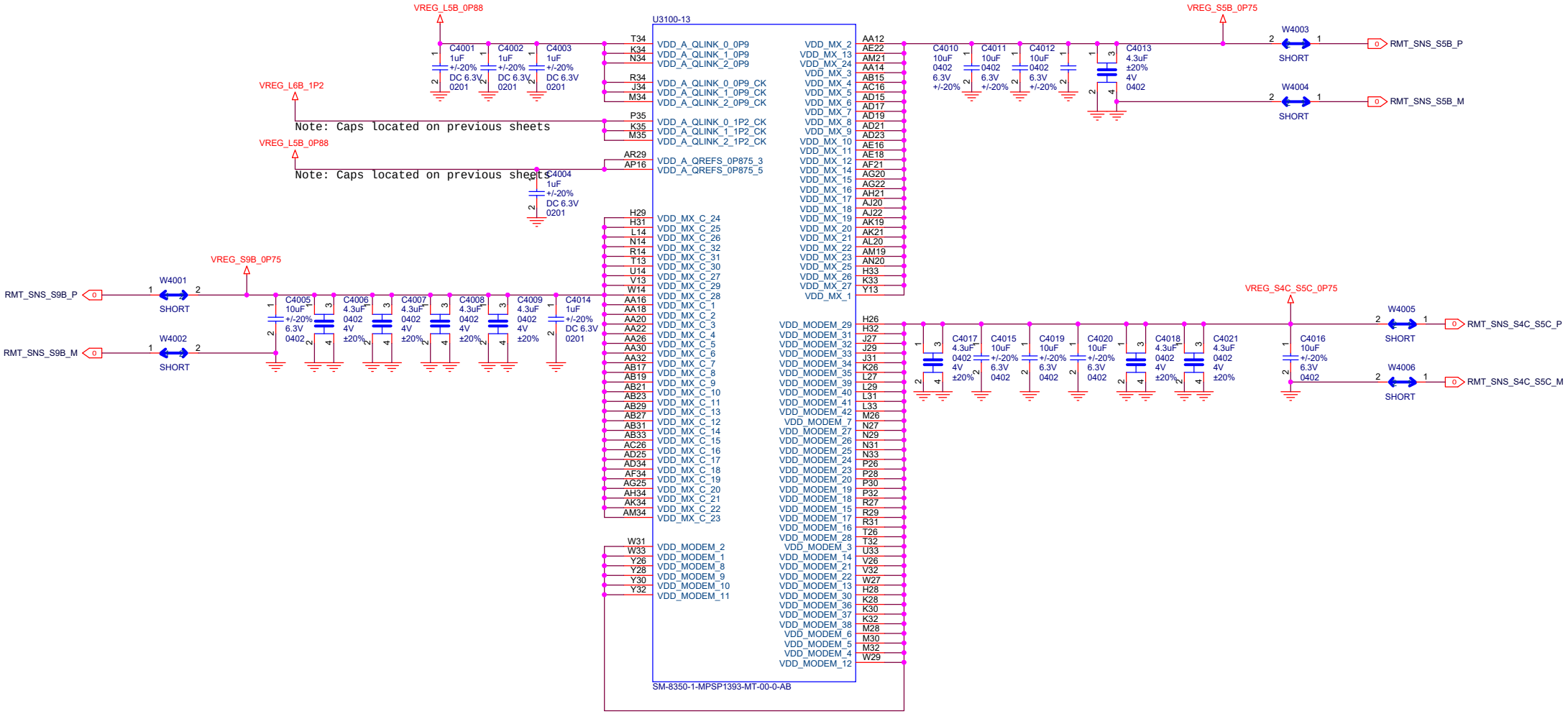

Title	K1
Size A3	Document Number SDM855 PWR4
Rev	
Date: Thursday, December 24, 2020	Sheet

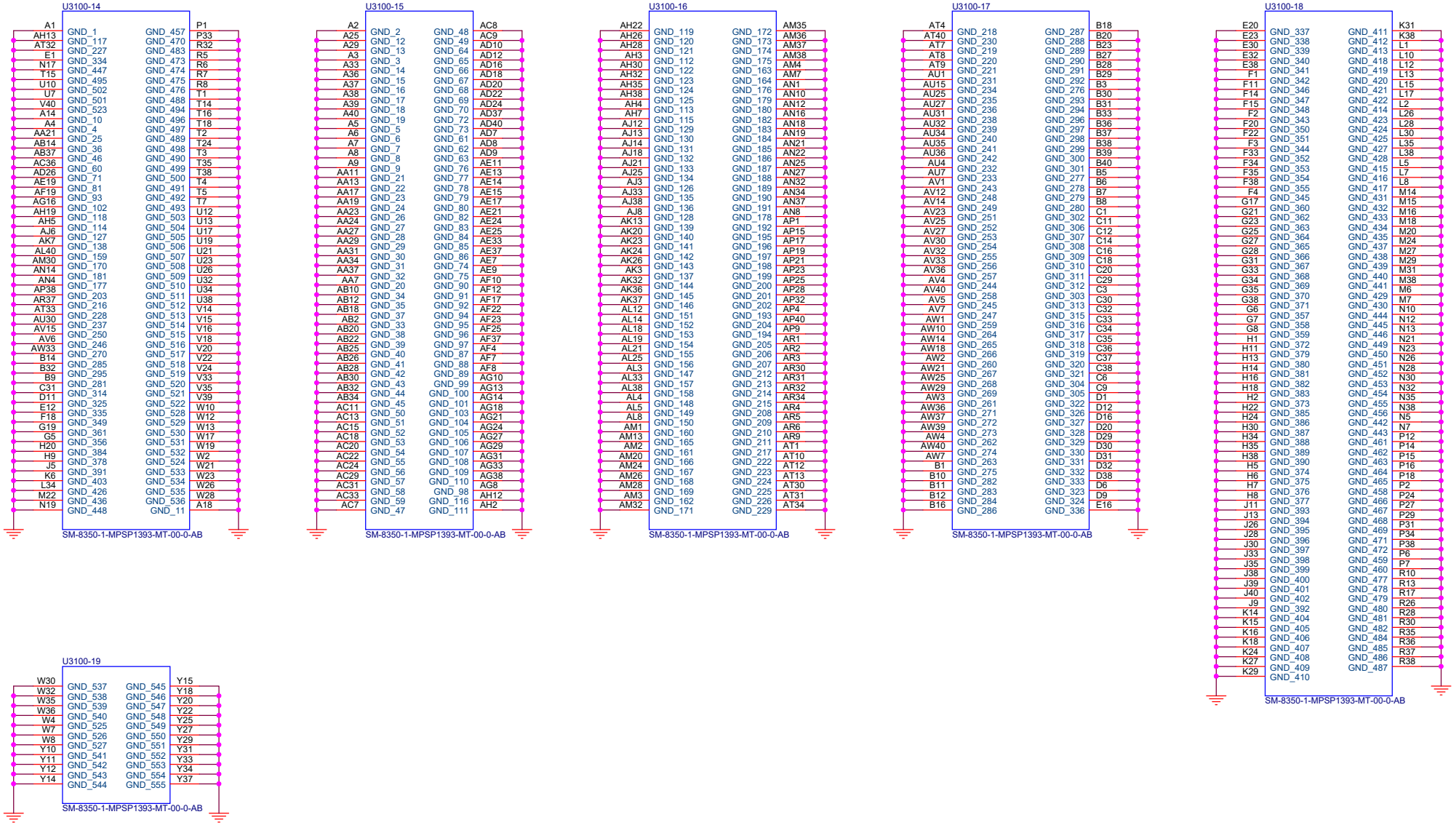

Title	K1	
Size A3	Document Number SDM855 GND	Rev
Date: Thursday, December 24, 2020	Sheet	

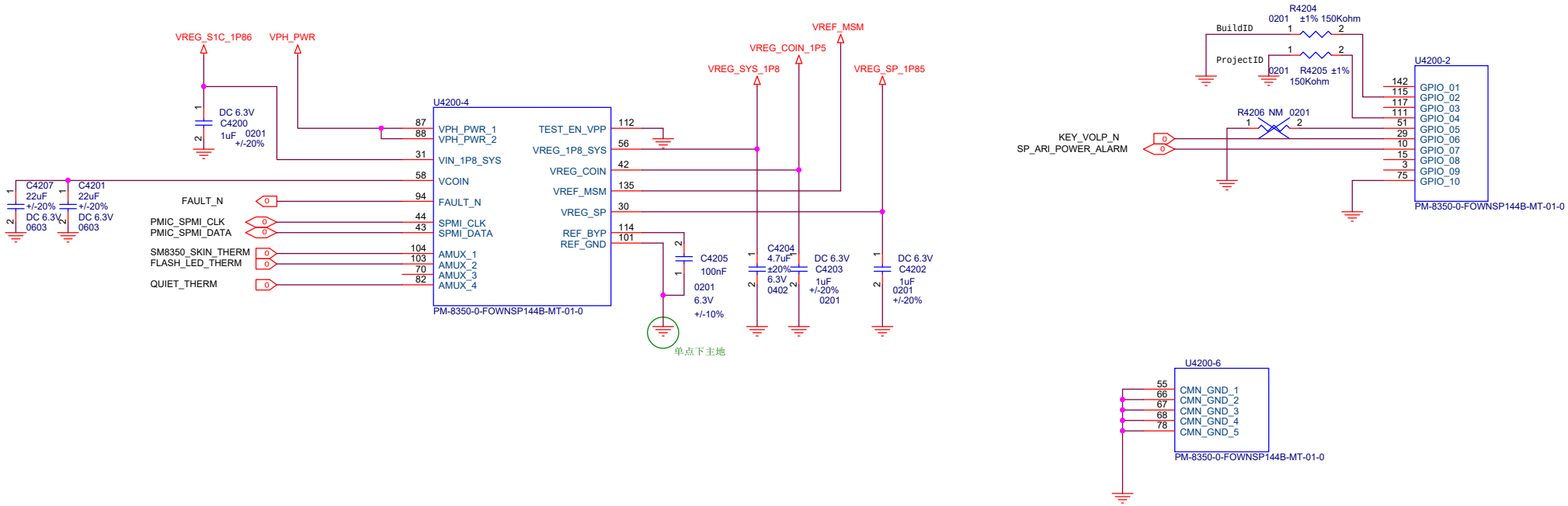

Title	K1	
Size A3	Document Number PM855 XO&CTRL	Rev
Date: Thursday, December 24, 2020	Sheet	

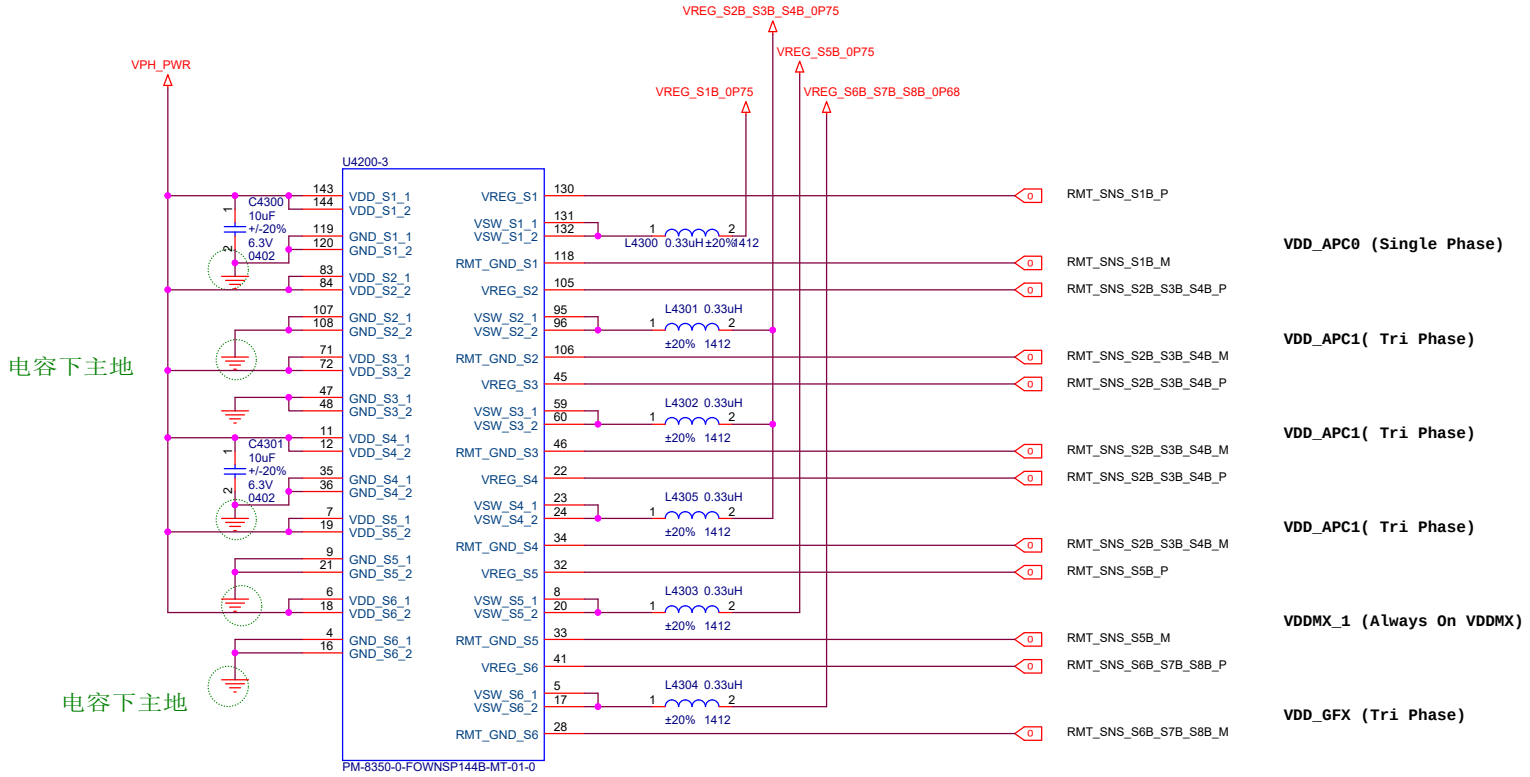

Title	K1	
Size A3	Document Number PM855 BUCK CONVERTER1	Rev
Date: Thursday, December 24, 2020	Sheet	

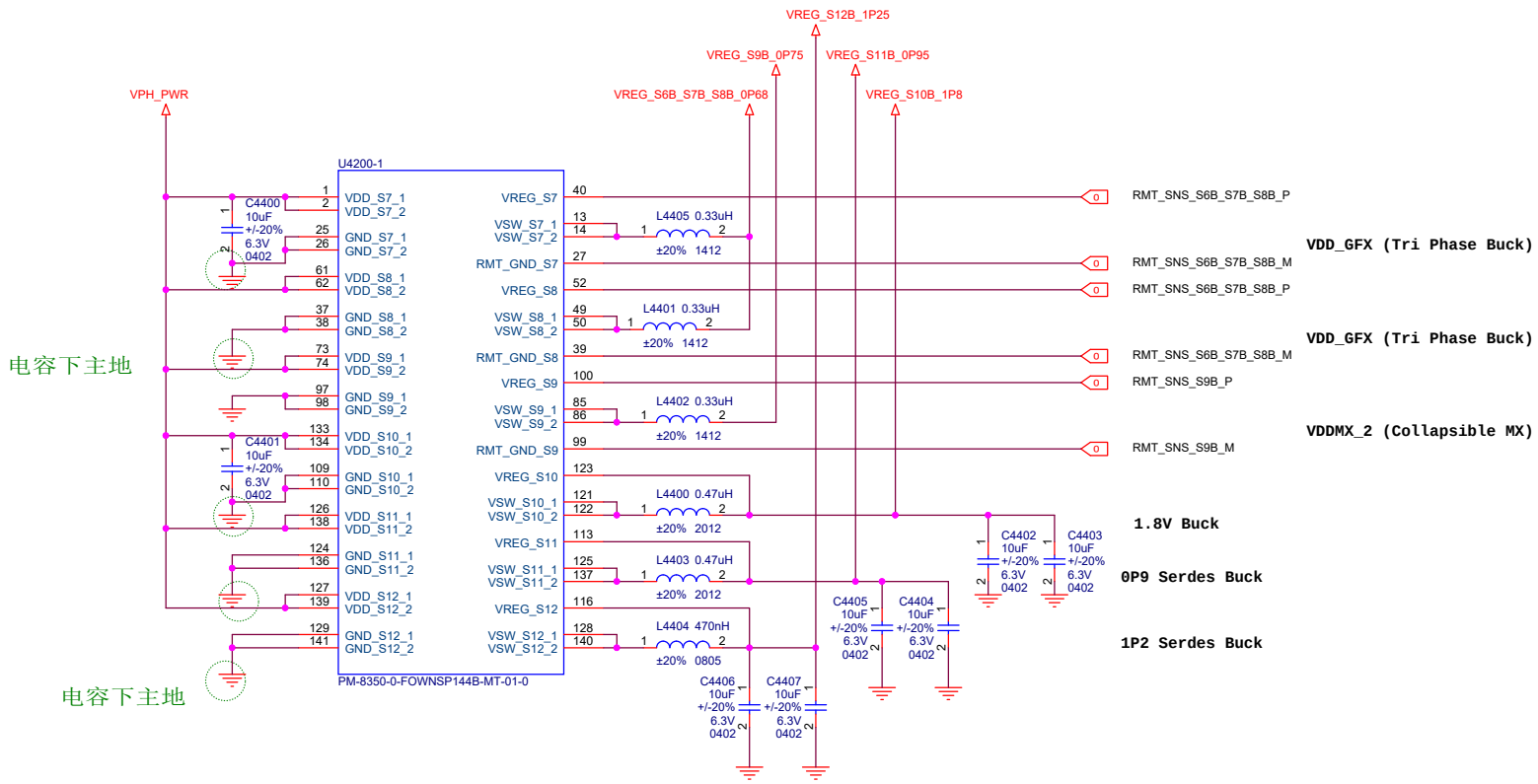

Title	K1
Size A3	Document Number PM855 BUCK CONVERTER2
Date:	Thursday, December 24, 2020

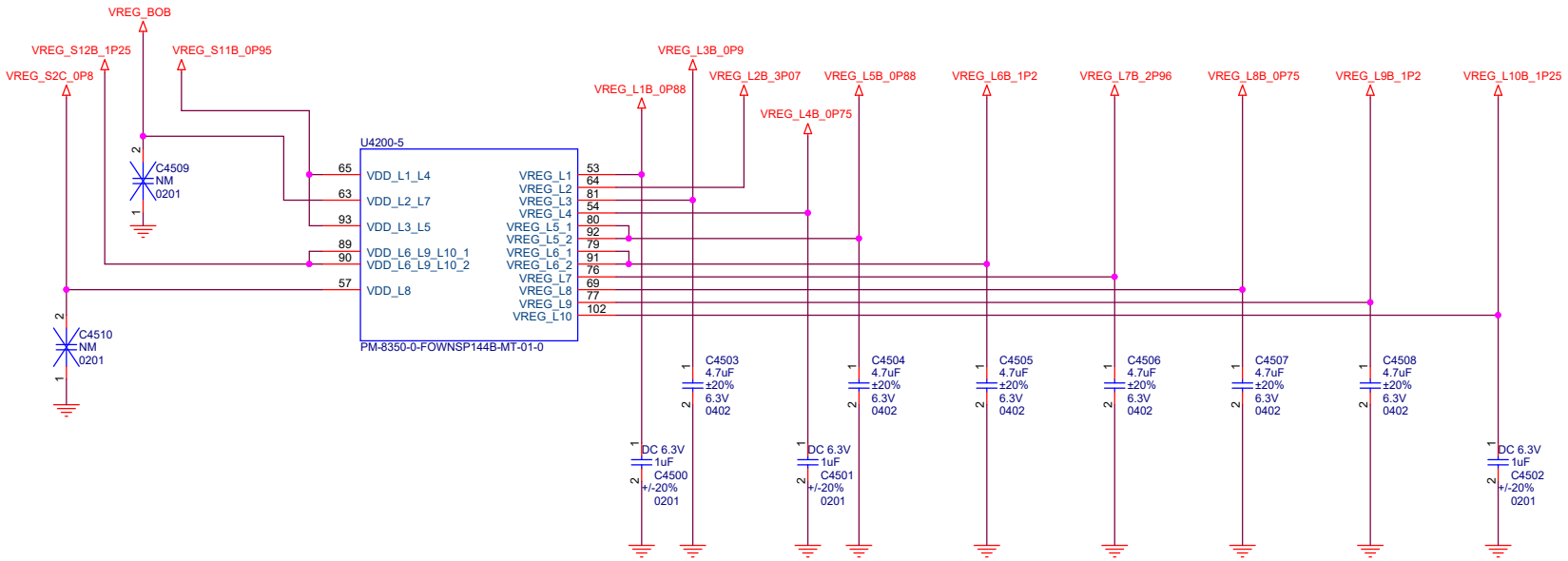

Title	K1	
Size A3	Document Number PM855 LDOs	Rev
Date: Thursday, December 24, 2020	Sheet	

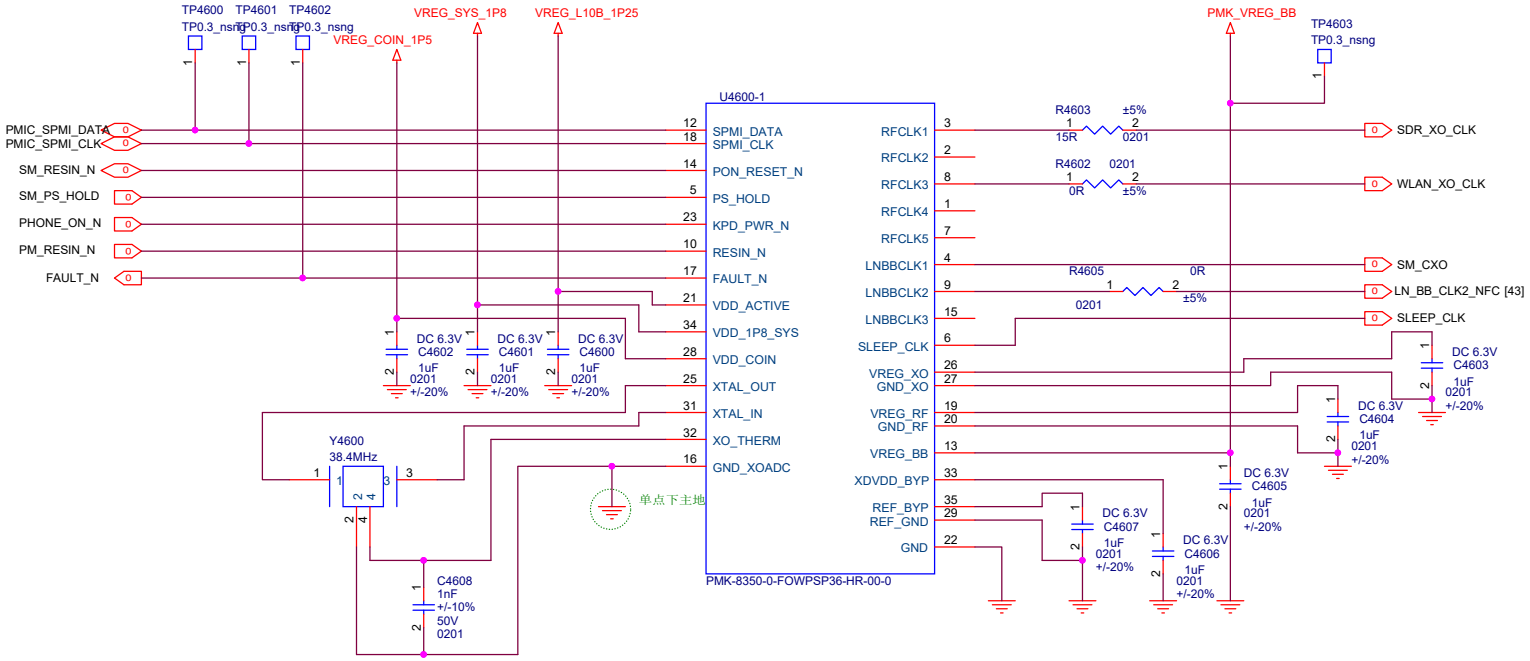

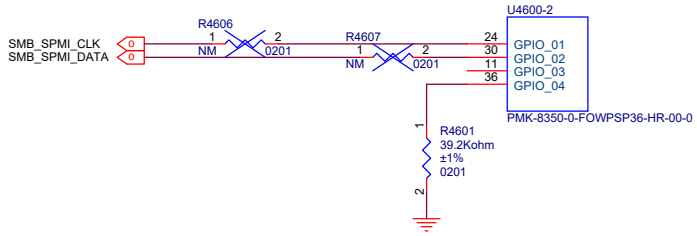

Title	K1	
Size A3	Document Number PM855 GPIO&GND	Rev
Date: Thursday, December 24, 2020	Sheet	

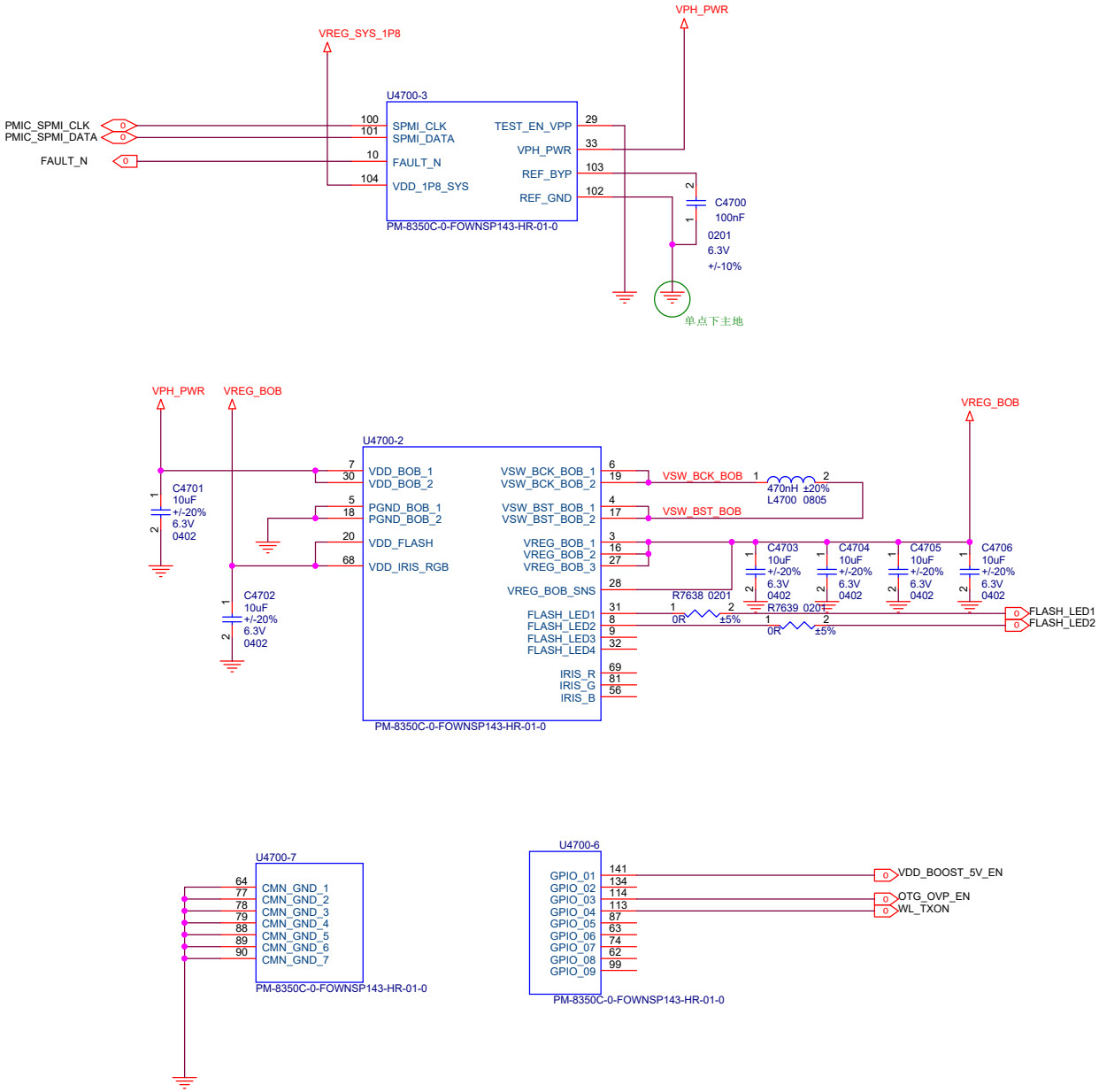

Title	K1	
Size A3	Document Number PM855A CTRL&GND	Rev
Date: Thursday, December 24, 2020	Sheet	

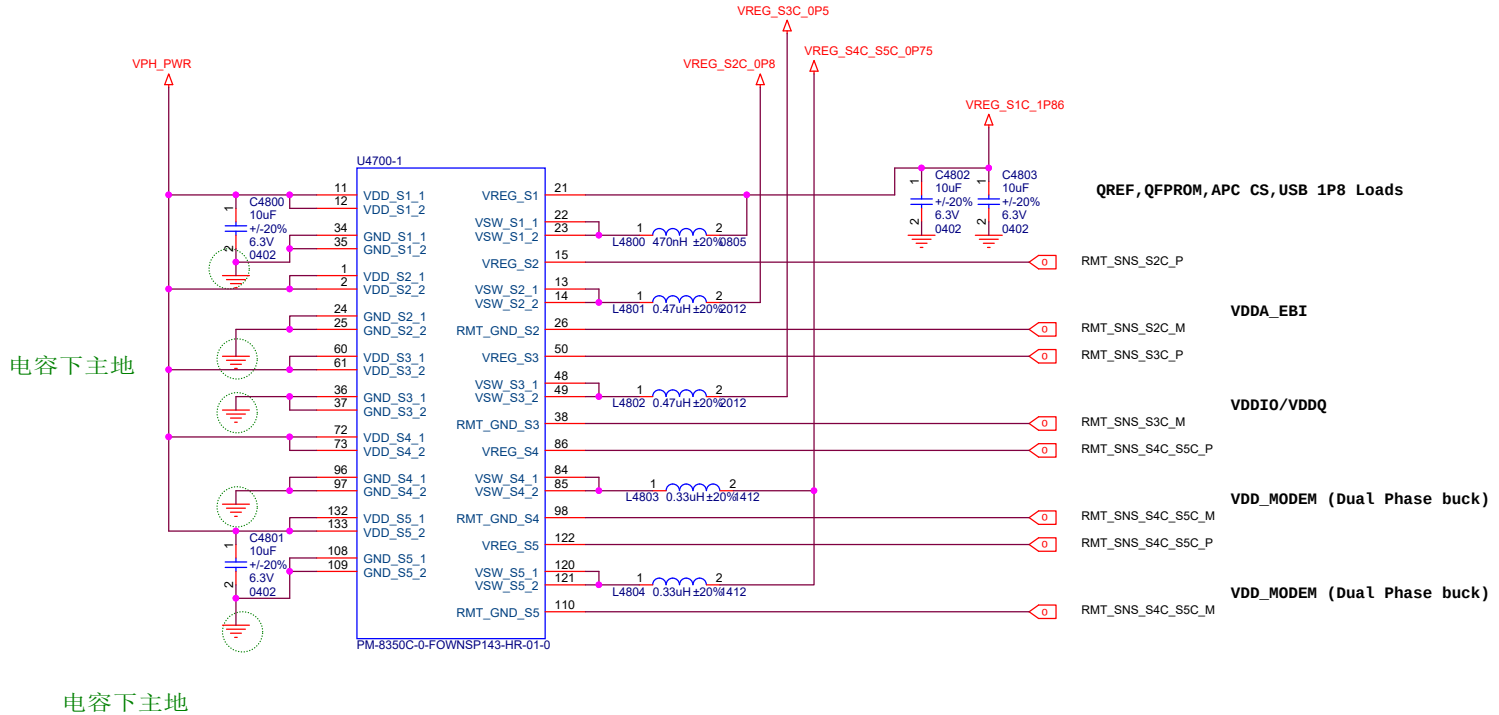

Title	K1	
Size A3	Document Number PM855A BUCK CONVERTER1	Rev
Date: Thursday, December 24, 2020	Sheet	

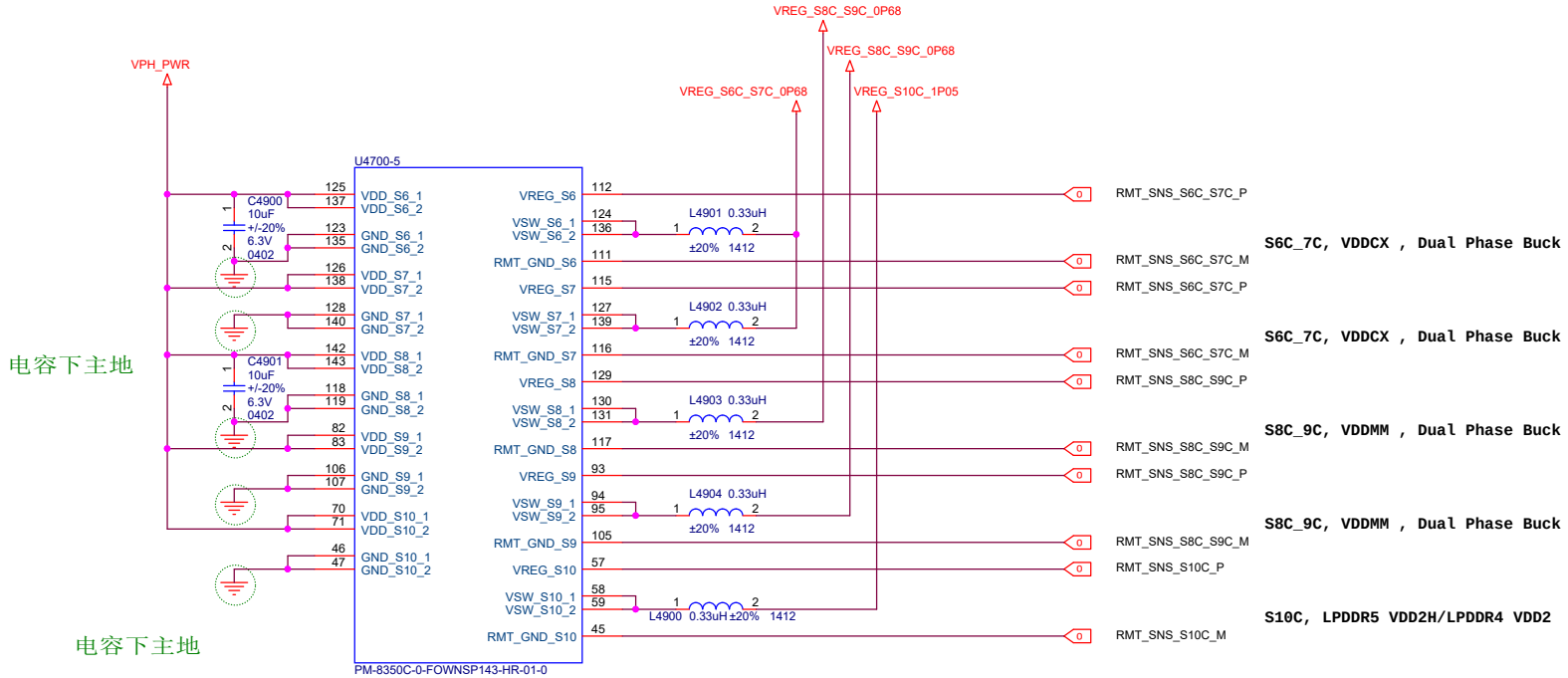

Title	K1	
Size A3	Document Number PM855A BUCK CONVERTER2	Rev
Date: Thursday, December 24, 2020	Sheet	

Title	K1
Size A3	Document Number PM855A AMOLED&BOB&FLASH
Rev	
Date: Thursday, December 24, 2020	Sheet

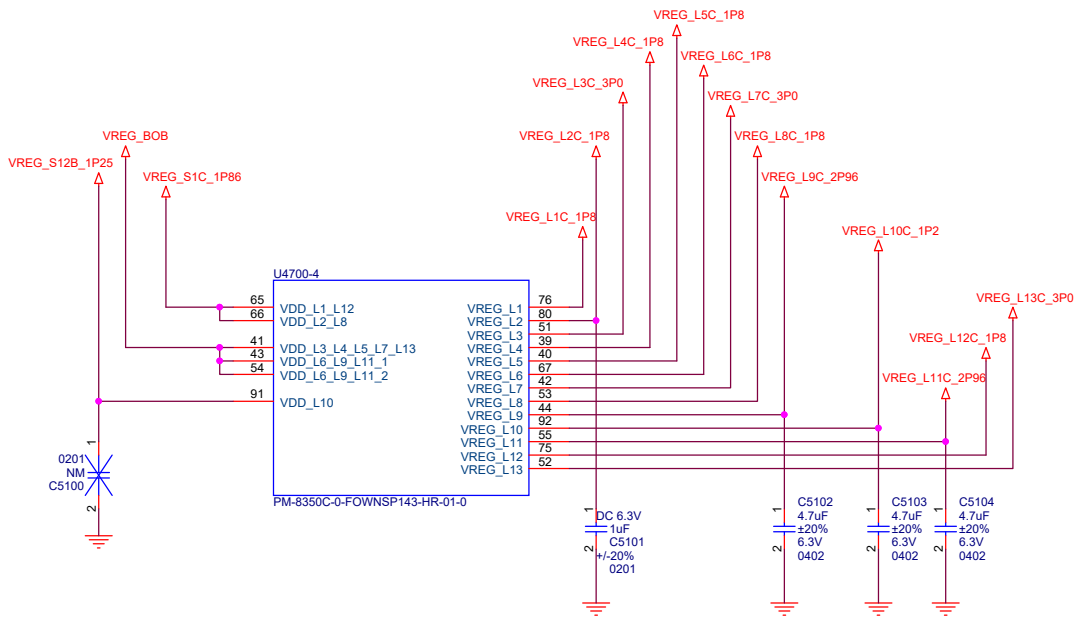

Title	K1	
Size A3	Document Number PM855A LDOs	Rev
Date: Thursday, December 24, 2020	Sheet	

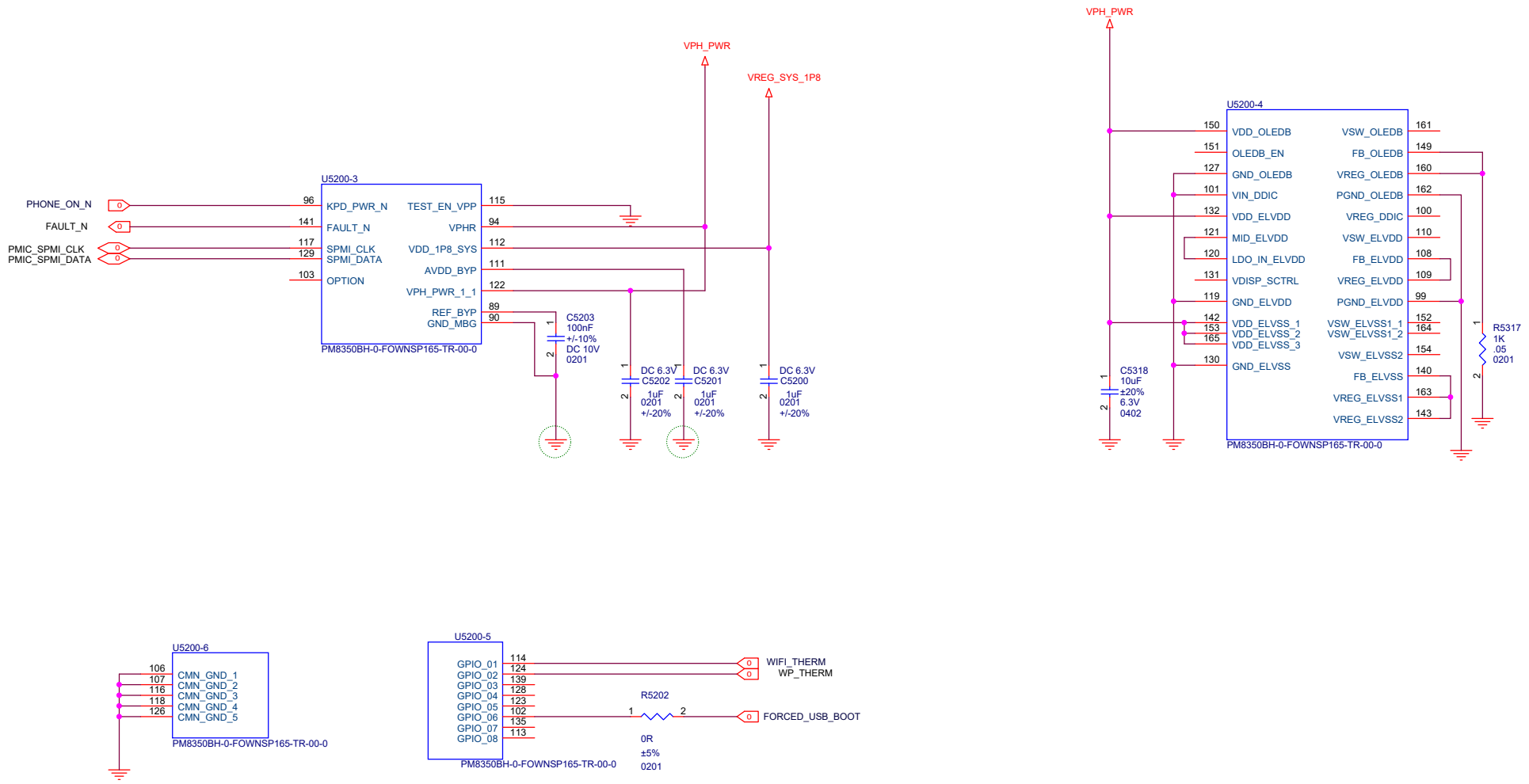

Title	K1	
Size A3	Document Number PM855B CTRL&GND	Rev
Date: Thursday, December 24, 2020	Sheet	

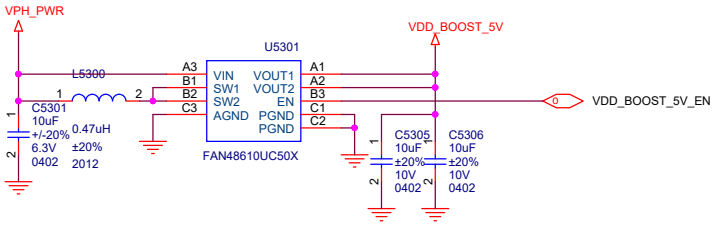

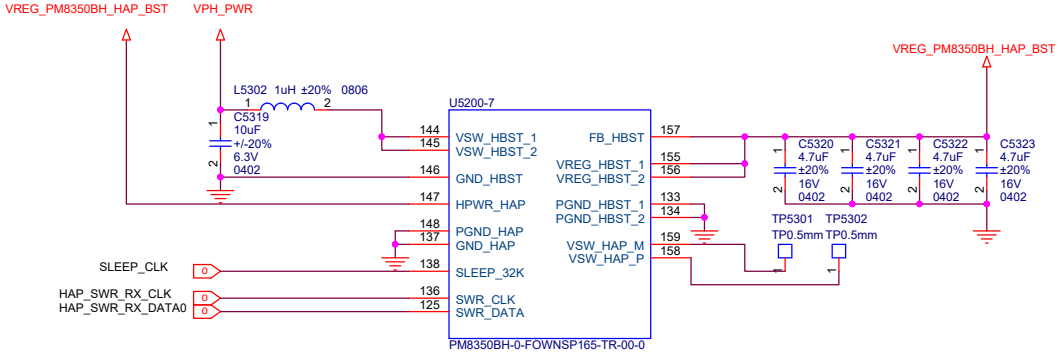

OTG

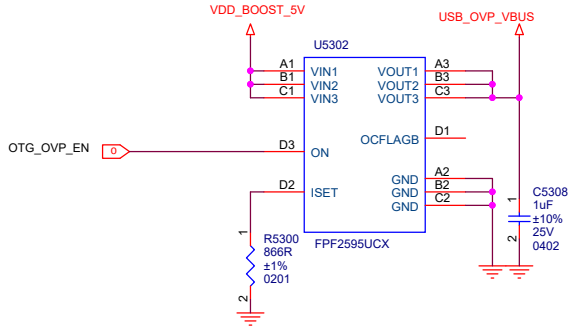

Title	K1	
Size A3	Document Number PM855B HAPTIC	Rev
Date: Thursday, December 24, 2020	Sheet	

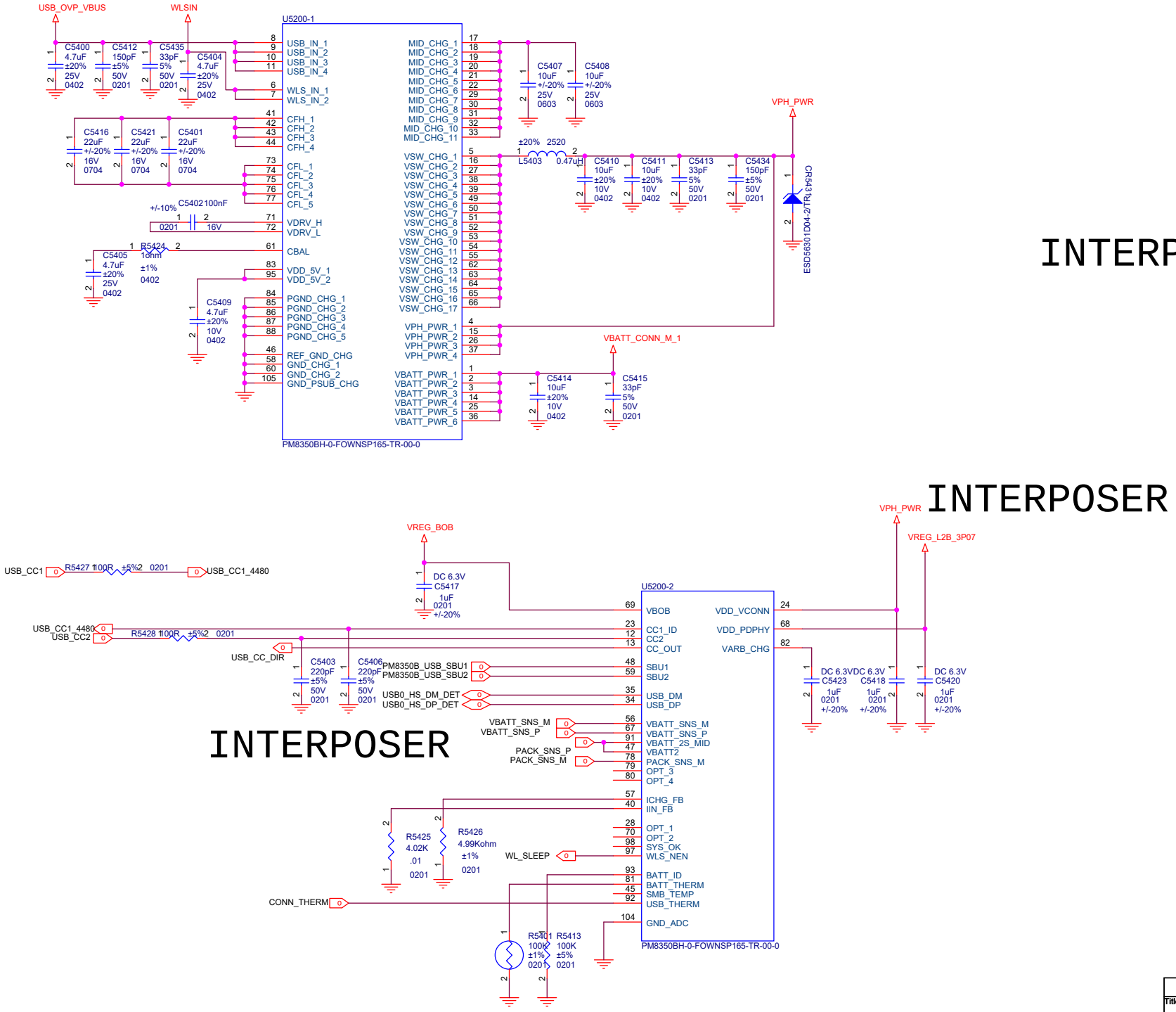

Title	K1
Size A3	Document Number PM855B Charger
Rev	
Date:	Thursday, December 24, 2020
Sheet	

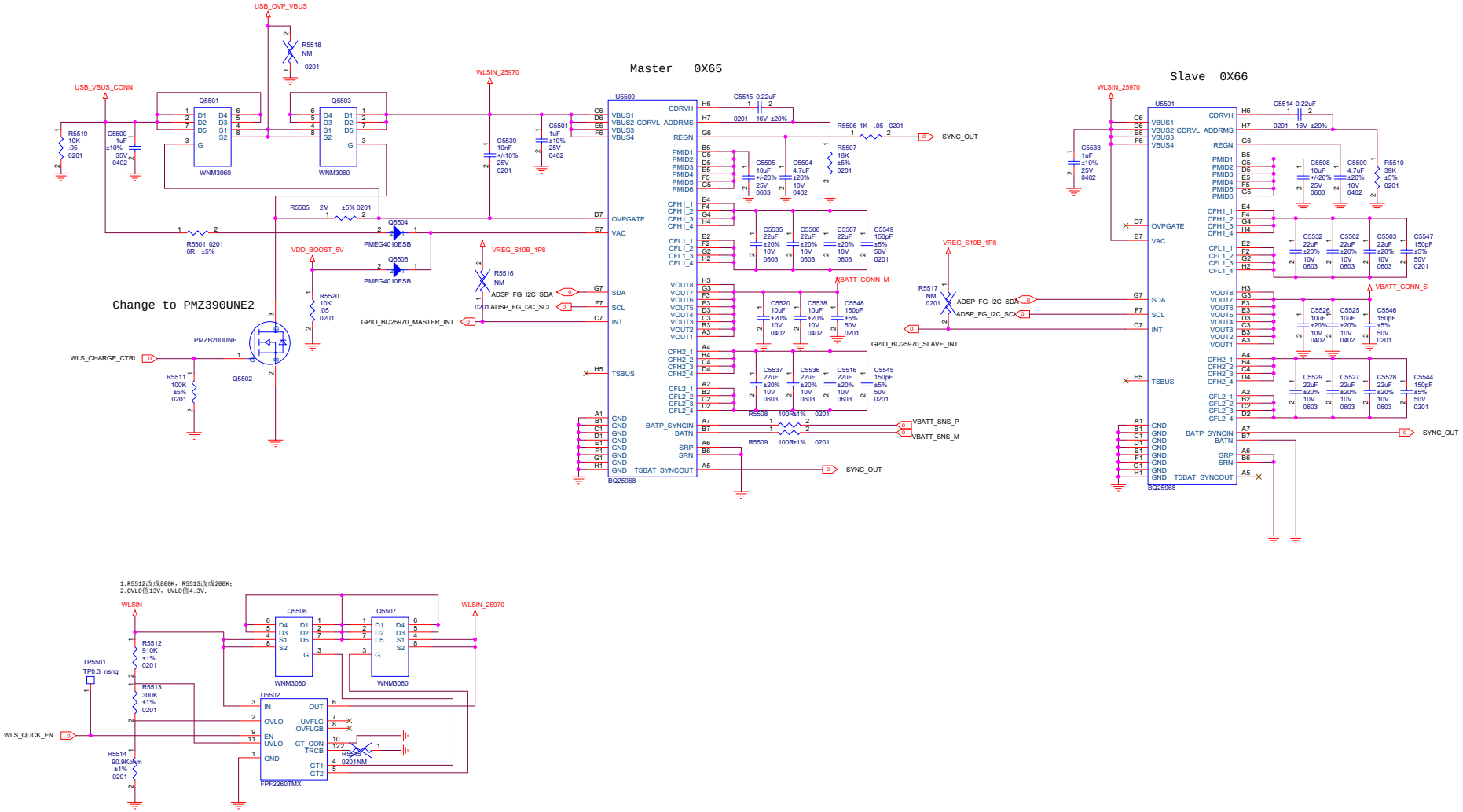

Title	K1
Size A2	Document Number SMB1396
Rev	
Date: Thursday, December 24, 2020	Sheet

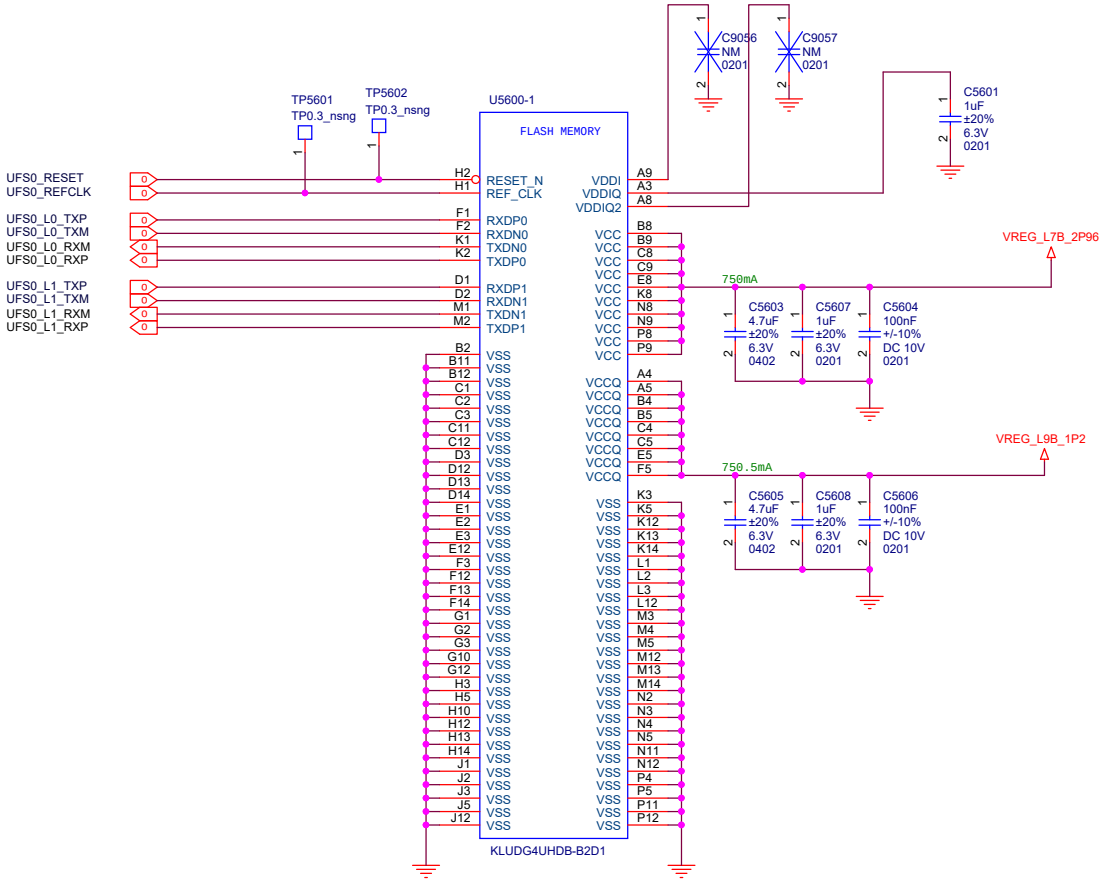

Title	K1	
Size A3	Document Number MEMORY	Rev
Date: Thursday, December 24, 2020	Sheet	

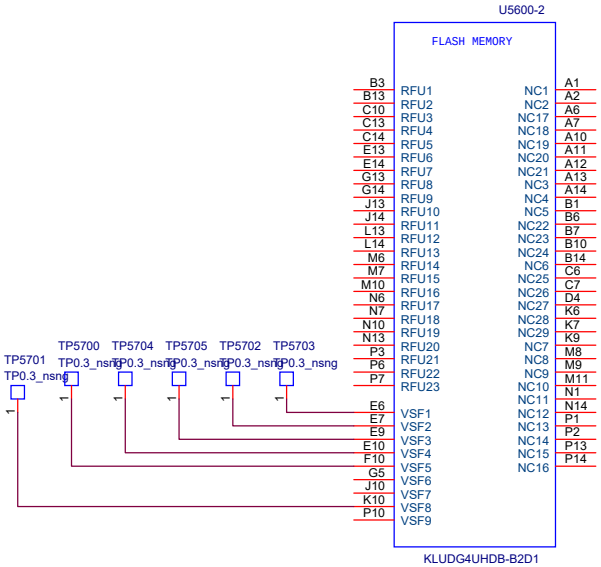

Title	K1	
Size A3	Document Number MEMORY-2	Rev
Date: Thursday, December 24, 2020	Sheet	

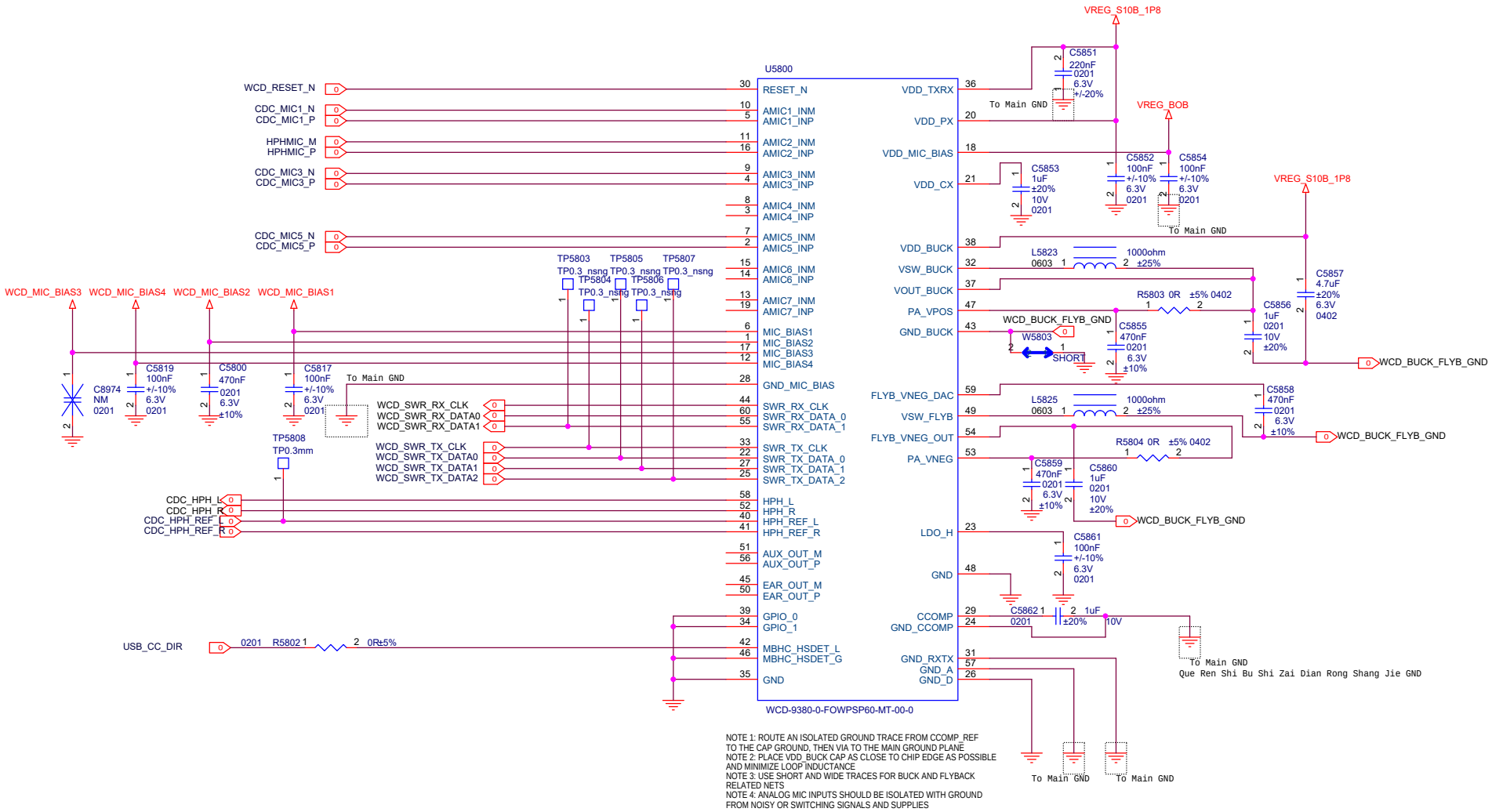

NOTE 1: ROUTE AN ISOLATED GROUND TRACE FROM CCOMP_REF TO THE CAP GROUND, THEN VIA TO THE MAIN GROUND PLANE
NOTE 2: PLACE VDD_BUCK CAP AS CLOSE TO CHIP EDGE AS POSSIBLE AND MINIMIZE LOOP INDUCTANCE
NOTE 3: USE SHORT AND WIDE TRACES FOR BUCK AND FLYBACK RELATED NETS
NOTE 4: ANALOG MIC INPUTS SHOULD BE ISOLATED WITH GROUND FROM NOISY OR SWITCHING SIGNALS AND SUPPLIES

Title	K1
Size A3	Document Number WCD9340-1
Rev	
Date: Thursday, December 24, 2020	Sheet

Title	K1
Size A3	Document Number WCD9340-2
Rev	
Date: Thursday, December 24, 2020	Sheet

HEADSET

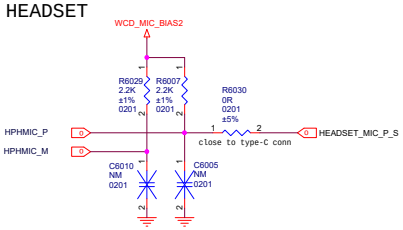

R6029、R6004、C6005靠近WCD9385（U5800）端放置

SPKR PA

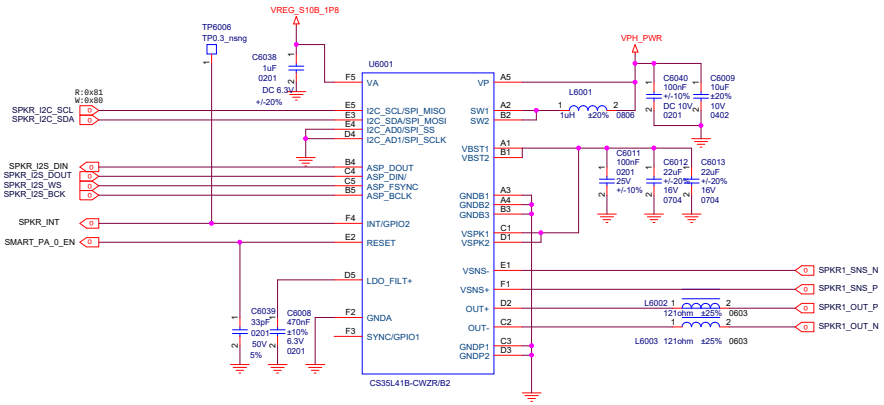

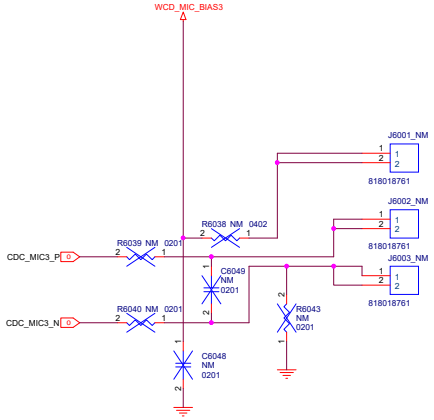

AUX MIC

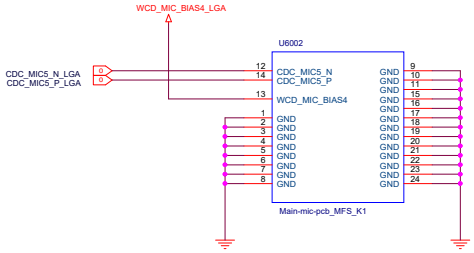

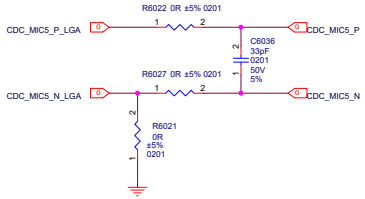

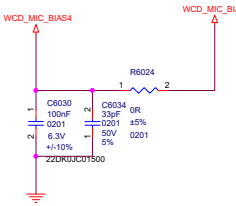

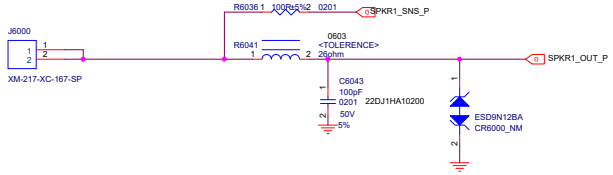

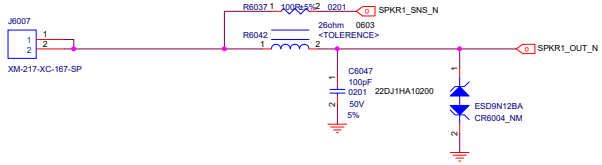

Title	K1	
Size A2	Document Number AUDIO	Rev
Date: Thursday, December 24, 2020	Sheet	

A+G

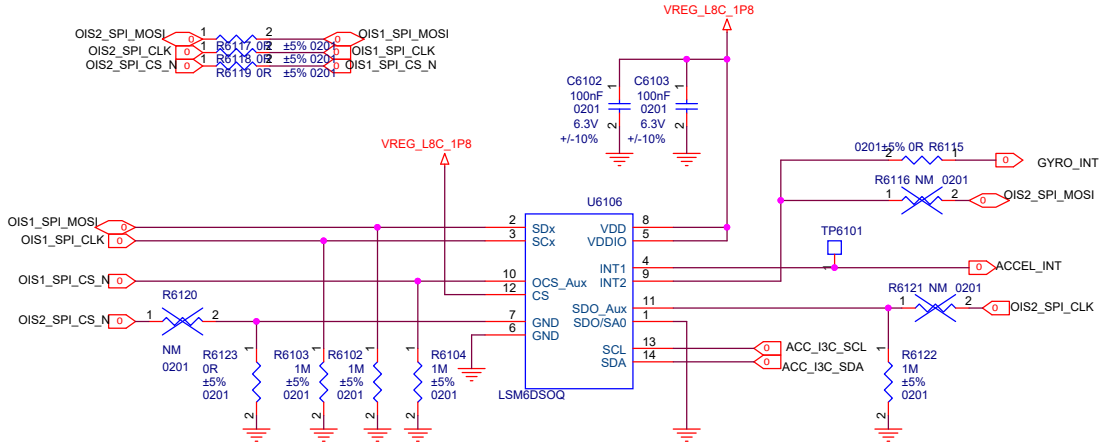

P_L-sensor

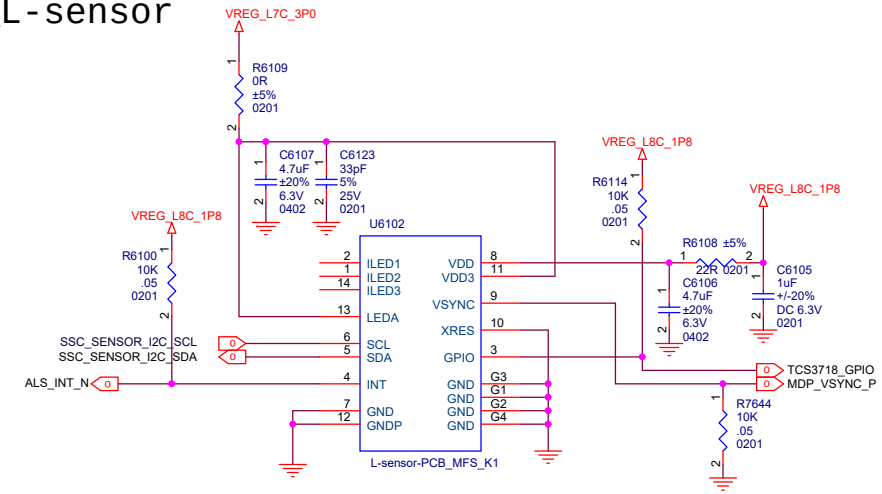

PRESSURE

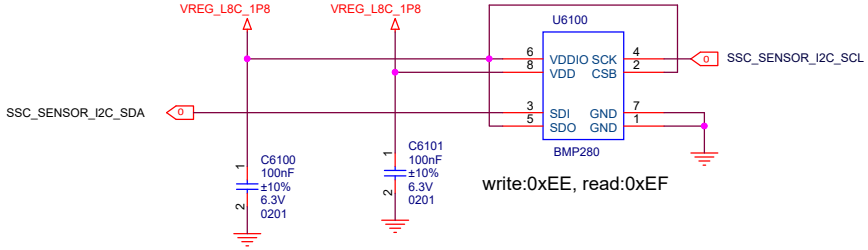

FOD

A+G MCU

Sidekey

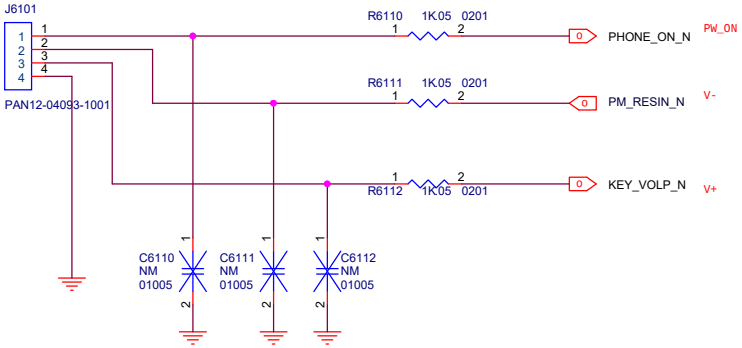

Title	K1	
Size A3	Document Number SENSOR	Rev
Date: Thursday, December 24, 2020	Sheet	

TOF&Flicker&FLASH&MIC INTERPOSER

HALL

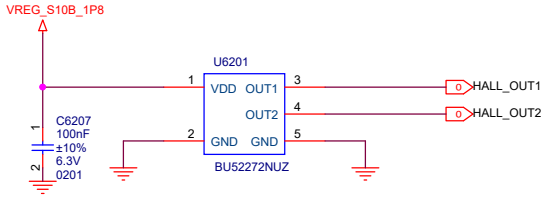

COMPASS

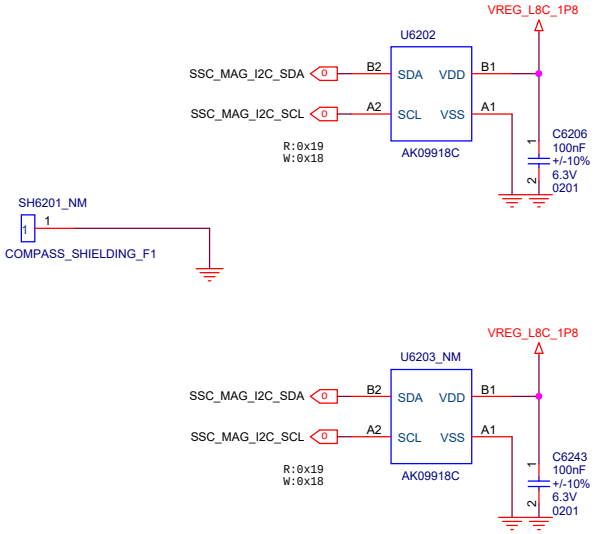

INFRARED

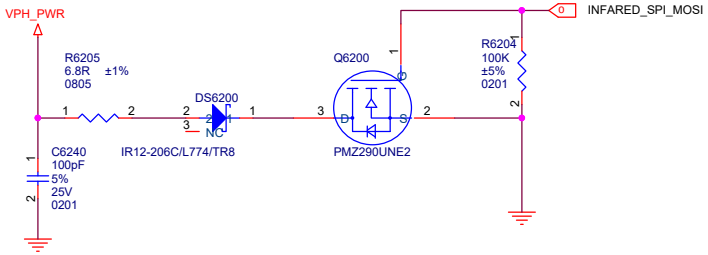

Title	K1	
Size A3	Document Number SENSOR-2	Rev
Date: Thursday, December 24, 2020	Sheet	

Title	K1	
Size A4	Document Number SIM	Rev
Date: Thursday, December 24, 2020	Sheet	

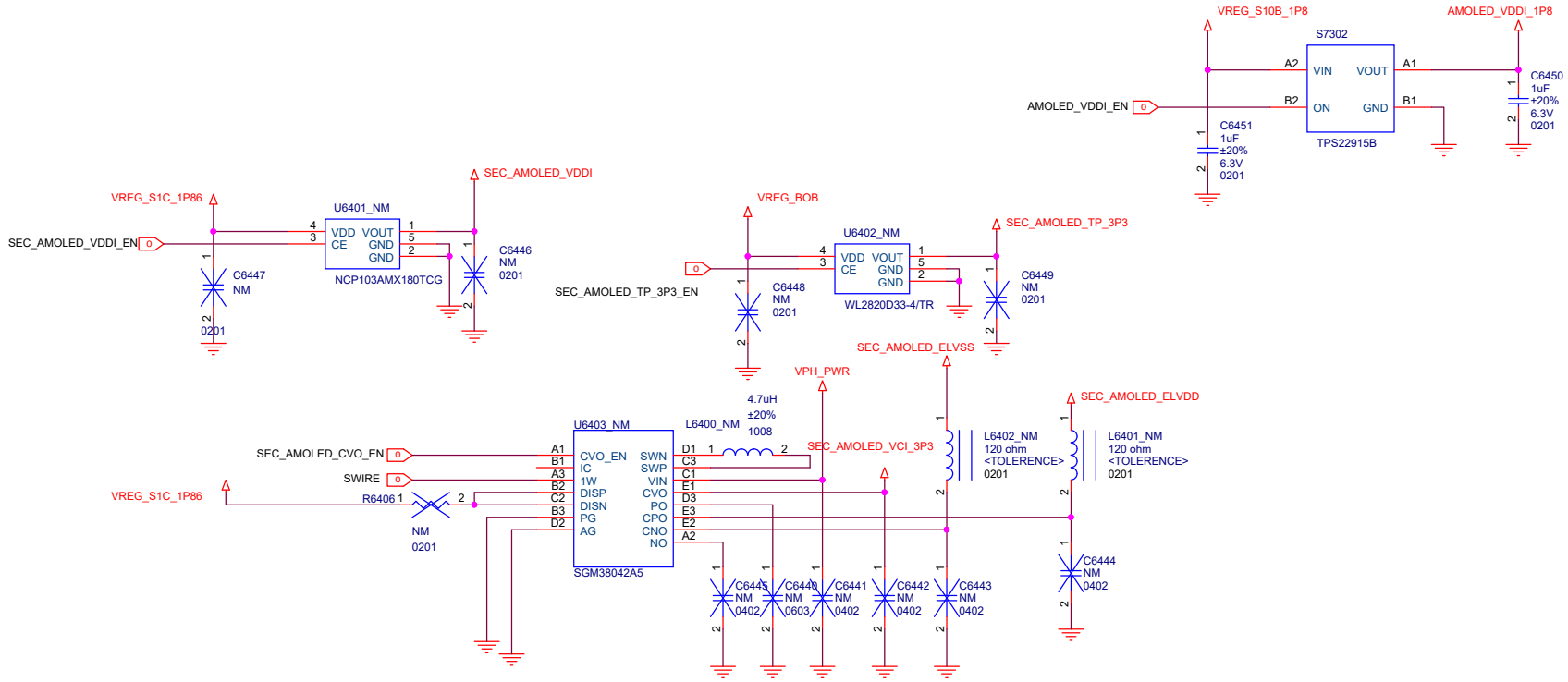

Title	K1	
Size A3	Document Number AMOLED	Rev
Date: Thursday, December 24, 2020	Sheet	

To Main DG

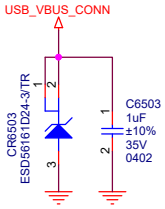

Title	K1	
Size A3	Document Number BTB	Rev
Date: Thursday, December 24, 2020	Sheet	

K1/K1A front 20M 3T2 DPHY

Title	K1	
Size A3	Document Number FRONT CAMERA	Rev
Date: Thursday, December 24, 2020	Sheet	

K1/K1A 50M GN2

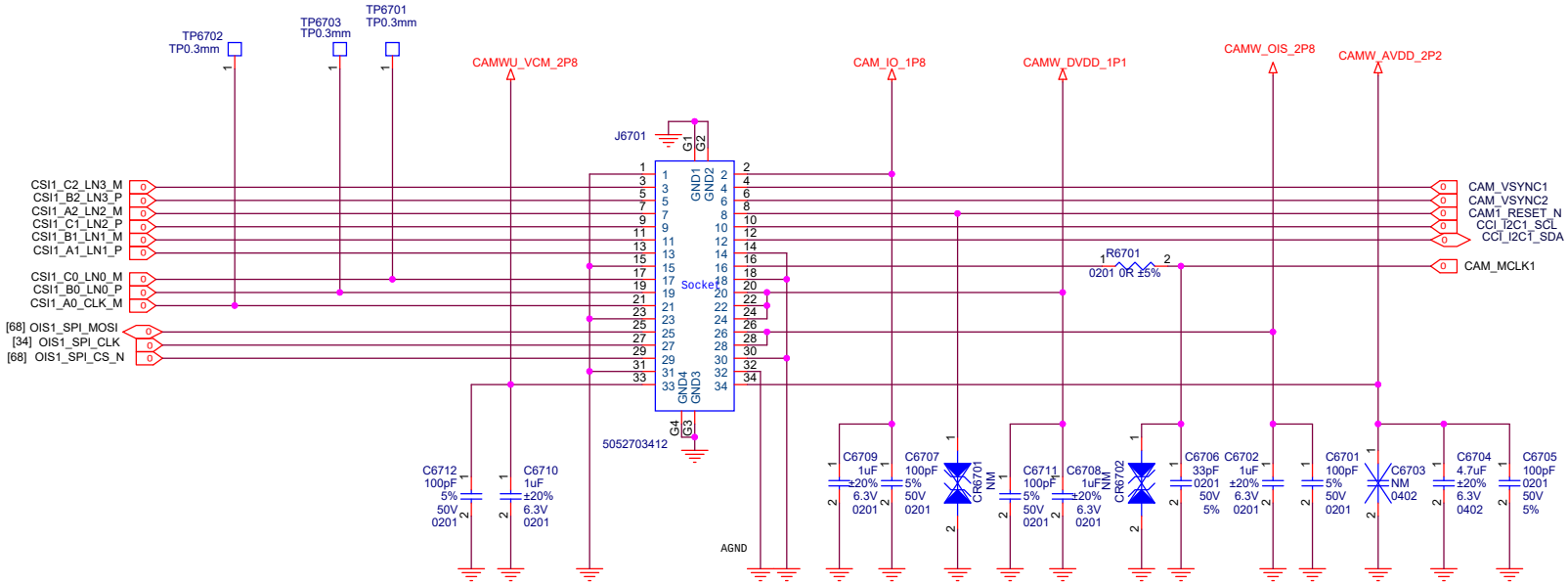

Title	K1	
Size A3	Document Number WIDE&TELE CAMERA	Rev
Date: Thursday, December 24, 2020	Sheet	

K1 ULTRA 48M CAMERA

INTERPOSER

K1 FOLDED 48M CAMERA

Title	K1	
Size A3	Document Number ULTRA CAMERA	Rev
Date: Thursday, December 24, 2020	Sheet	

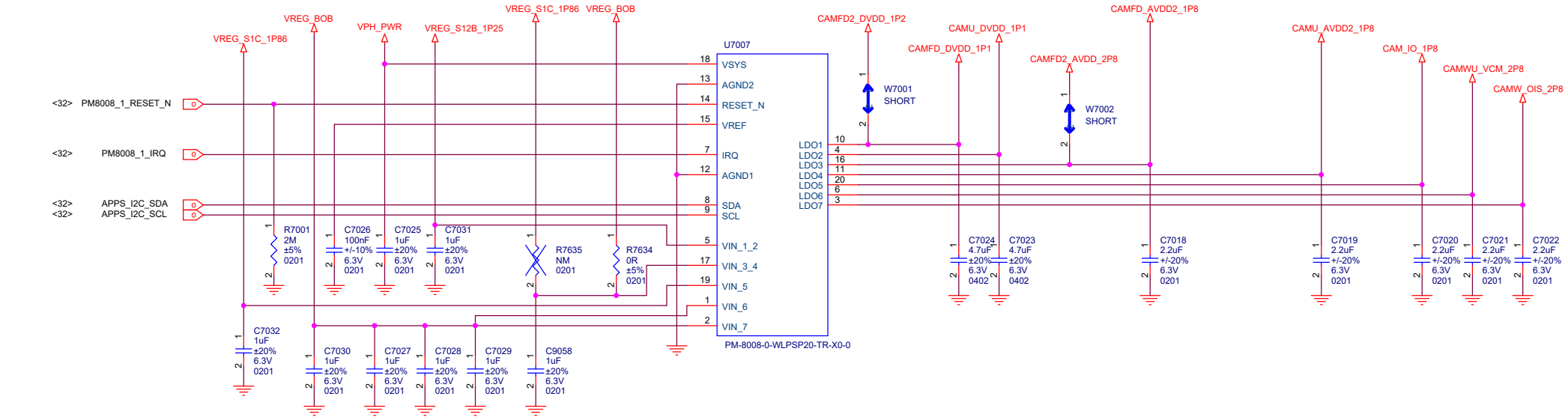

INTERPOSER

INTERPOSER

INTERPOSER

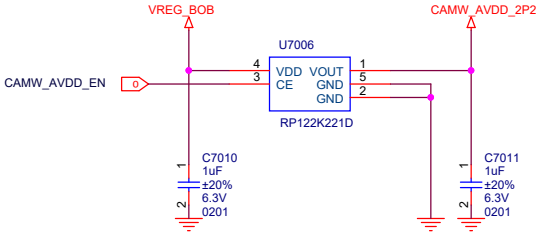

INTERPOSER

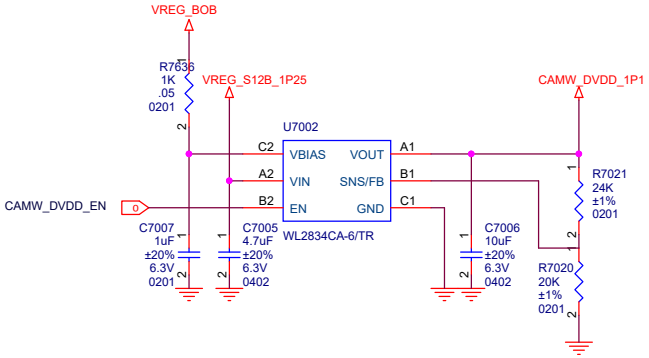

Title	K1	
Size A3	Document Number CAMERA LDOs	Rev
Date: Thursday, December 24, 2020	Sheet	

8M Folded NM 主板

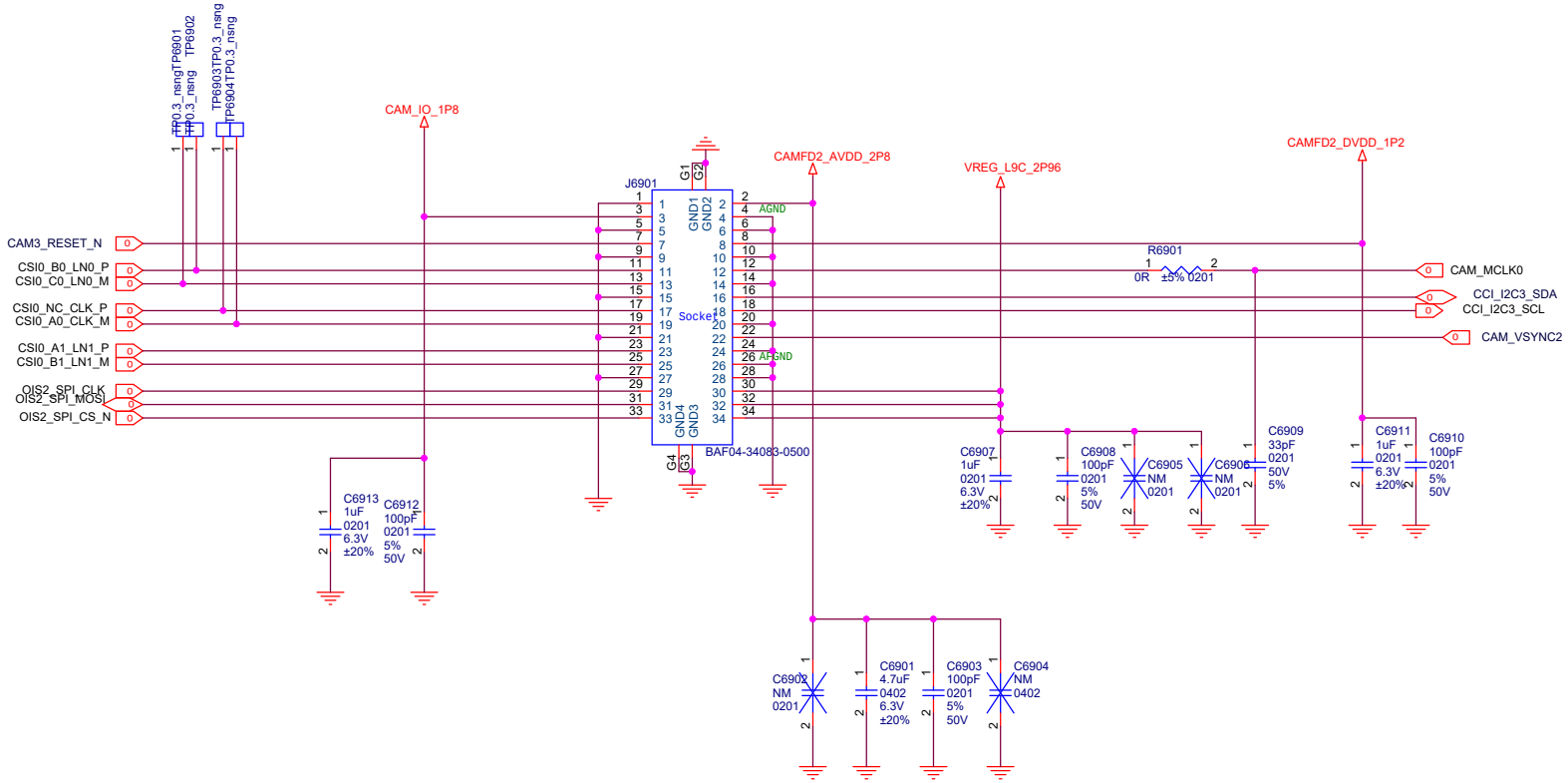

Title	K1	
Size A3	Document Number TEST POINT	Rev
Date: Thursday, December 24, 2020	Sheet	

Title	K1	
Size A2	Document Number USB CONNECTOR	Rev
Date: Thursday, December 24, 2020	Sheet	

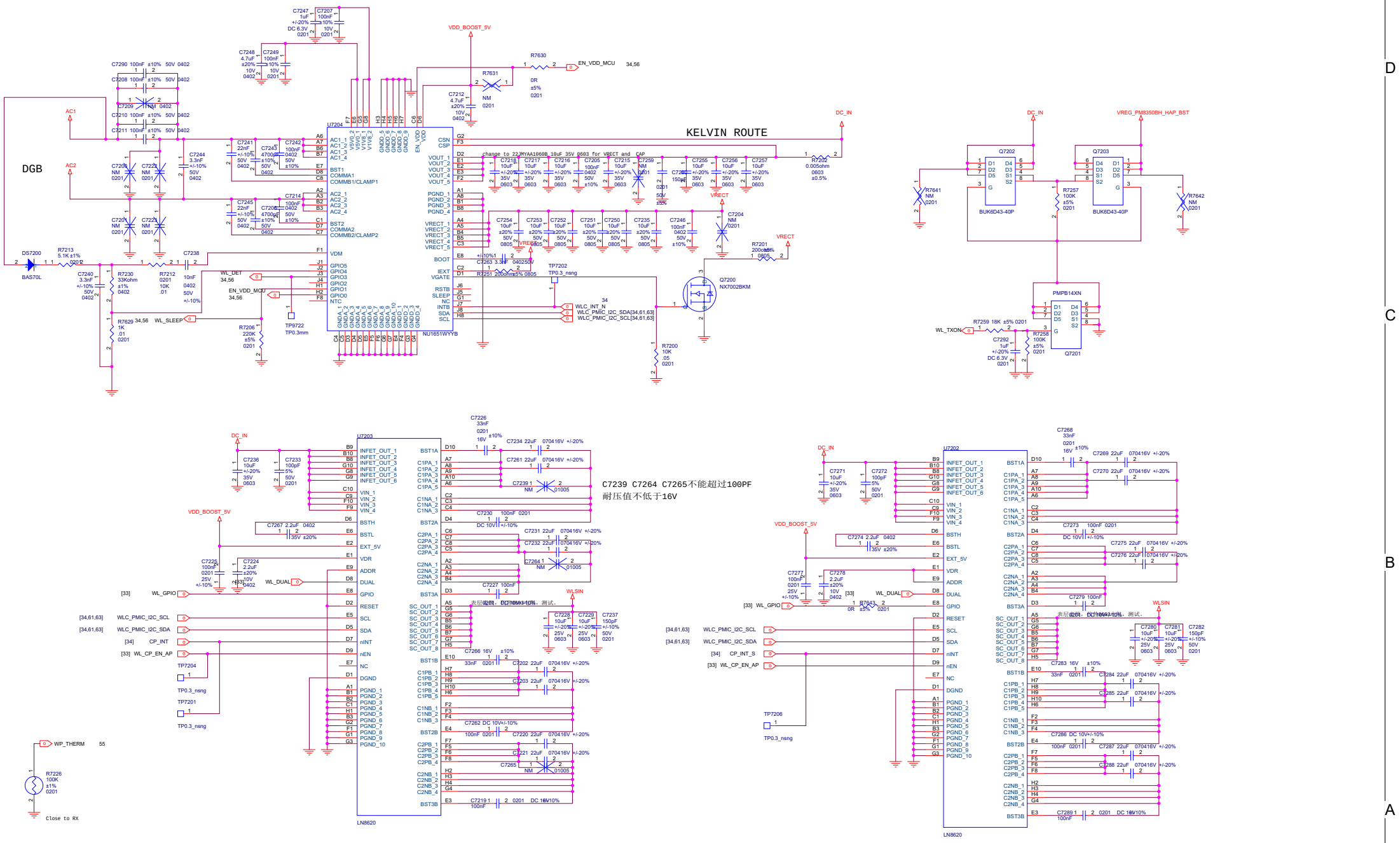

Title	K1
Size A2	Document Number WL POWER
Rev	
Date:	Thursday, December 24, 2020
Sheet	

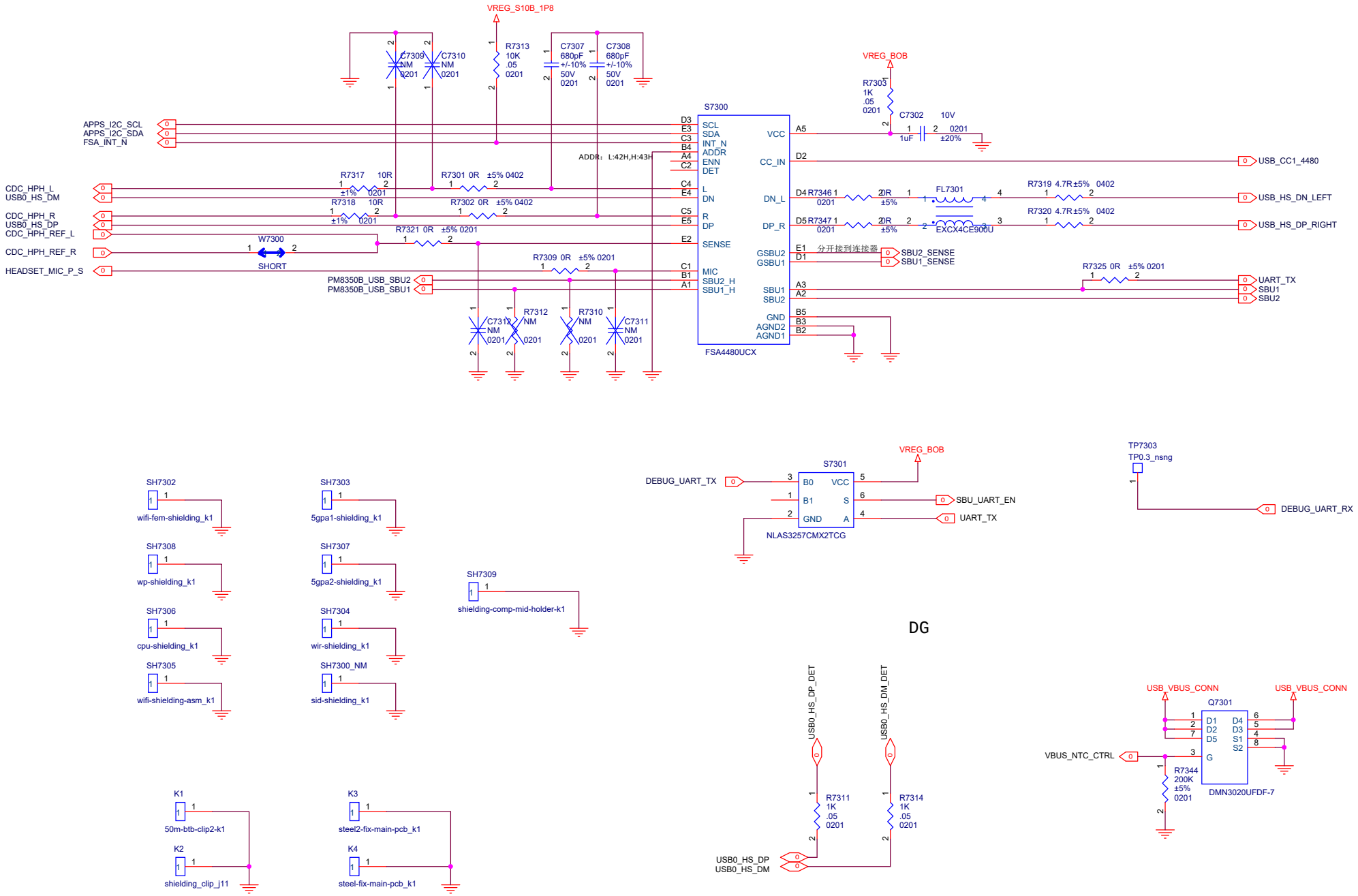

Title	K1	
Size A3	Document Number PM8009	Rev
Date: Thursday, December 24, 2020	Sheet	

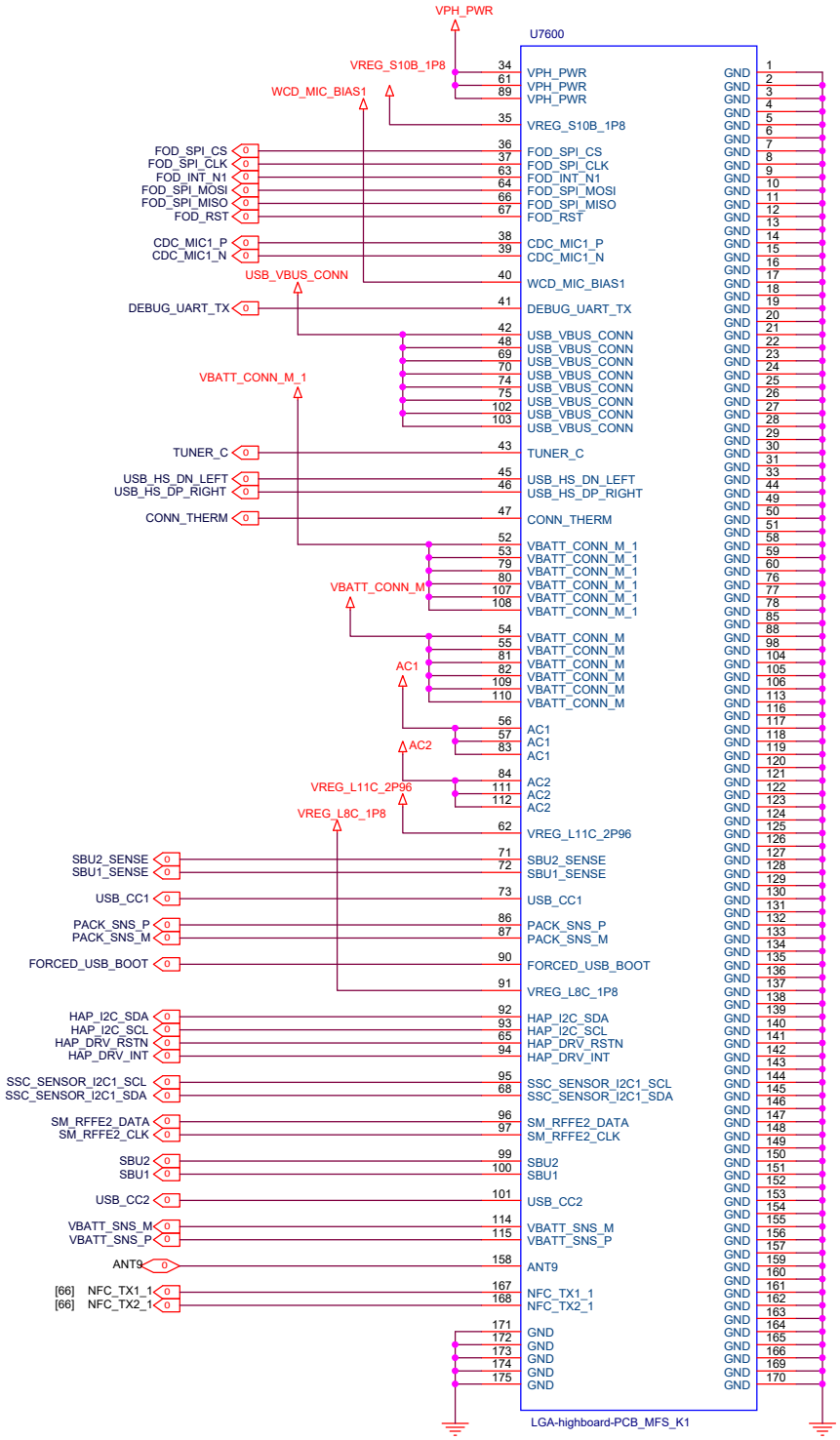

Title	<Title>
Size A3	Document Number <Doc>
Rev	<RevCode>
Date:	Thursday, December 24, 2020
Sheet	